TRANSNET

freight rail

REQUEST FOR QUOTATIONS

Transnet Freight Rail a Division of Transnet SOC Ltd. invites all interested parties to respond to a request for quotation (RFQ) as indicated below. All tenders should be submitted on the appropriate tender forms and should be deposited in the **Tender Box** before 12h00 on the closing date of the Tender.

If delivered by hand, the RFQ submissions must be addressed to **The Chairman of the Acquisition Council, Ground Floor Queens Warehouse (Reception Area) 237 Mahatma Gandhi Road Point Durban.**

Tender documents may be obtained Free Of Charge on and after **Friday 30 May 2014** and **must be collected before 15h00 on Friday 6 June 2014** at Transnet Freight Rail, Supply Chain Services, Queen's Warehouse, 237 Mahatma Gandhi Road, Durban during the office hours 09h00 to 15h00 during weekdays.

(NB: No tenders will be issued after this deadline)

RFQ documents may be viewed from the website by clicking on the RFQ number that is highlighted in red on the website: (http://www.transnetfreightrail-tfr.net/Supplier/Pages/Tenders.aspx)

RFQ NUMBER: RME DBN 036/2014
DESCRIPTION: FABRICATE AND SUPPLY SIGNAL GANTRY STRUCTURE
REQUIRED AT: 130 EEL ROAD BAYHEAD DURBAN

A Formal briefing session **will not be held** but should Respondents have specific queries they should e-mail these to the Transnet employee(s) indicated in the (RFQ)

CLOSING DATE: 17 JUNE 2014 AT 12H00.

For enquiries regarding the collection of the RFQ please contact:

Name: Anne Mongie

Tel : 031 361 1759

Email: anne.mongie@transnet.net

Transnet Freight Rail urges Clients & Suppliers to report fraud/corruption at Transnet to TIPOFFS ANONYMOUS: 0800 003 056

TRANSNET

Transnet, a division of

TRANSNET SOC LTD

Registration Number 1990/000900/30

[hereinafter referred to as **Transnet**]

REQUEST FOR QUOTATION [RFQ] No RME DBN 036/2014

FOR THE FABRICATION AND SUPPLY OF: **SIGNAL GANTRY STRUCTURE**

FOR DELIVERY TO: **130 EEL ROAD BAYHEAD DURBAN**

ISSUE DATE: **30 MAY 2014**

CLOSING DATE: **17 JUNE 2014**

CLOSING TIME: **12:00**

Section 1
NOTICE TO BIDDERS

Quotations which must be completed as indicated in Section 2 of this RFQ are to be submitted as follows:

METHOD: Tender Box

CLOSING VENUE: The Chairman of the Acquisition Council
Ground Floor Queens Warehouse
237 Mahatma Gandhi Road (Point) Road
Point, Durban

1 Responses to RFQ

Responses to this RFQ [**Quotations]** must not include documents or reference relating to any other quotation or proposal. Any additional conditions must be embodied in an accompanying letter.

2 Broad-Based Black Economic Empowerment [B-BBEE]

Transnet fully endorses and supports the Government's Broad-Based Black Economic Empowerment Programme and it would therefore prefer to do business with local business enterprises who share these same values. Transnet will accordingly allow a "preference" to companies who provide a valid B-BBEE Verification Certificate. All procurement transactions will be evaluated accordingly.

2.1 B-BBEE Scorecard and Rating

As prescribed in terms of the Preferential Procurement Policy Framework Act (PPPFA), Act 5 of 2000 and its Regulations, Respondents are to note that the following preference point system is applicable to all bids:

- the 80/20 system for requirements with a Rand value of up to R1 000 000 (all applicable taxes included).
- Bidders are to note that if the 80/20 preference point system is stipulated in this RFP and all Bids received exceed R1 000 000.00, the RFP must be cancelled.

The value of this bid is estimated to be below R1000 000 (all applicable taxes included) and therefore the **80/20** system shall be applicable.

When Transnet invites prospective suppliers to submit Proposals for its various expenditure programmes, it requires Respondents to have their B-BBEE status verified in compliance with the Codes of Good Practice issued in terms of the Broad Based Black Economic Empowerment Act No. 53 of 2003.

The Department of Trade and Industry recently revised the Codes of Good Practice on 11 October 2013 [Government Gazette No. 36928]. The Revised Codes will replace the Black Economic Empowerment Codes of Good Practice issued on 9 February 2007. The Revised Codes provide for a one year transitional period starting 11 October 2013. During the transitional period, companies may elect to be measured in terms of the Revised Codes or the 2007 version of the Codes. After the first year of the implementation of the Revised Codes, B-BBEE compliance will be measured in

terms of the Revised Codes without any discretion. Companies which are governed by Sector-specific Codes will be measured in terms of those Sector Codes.

As such, Transnet will accept B-BBEE certificates issued based on the Revised Codes. Transnet will also continue to accept B-BBEE certificates issued in terms of the 2007 version of the Codes provided it was issued before 10 October 2014. Thereafter, Transnet will only accept B-BBEE certificates issued based on the Revised Codes.

Respondents are required to complete Annexure A [the B-BBEE Preference Point Claim Form] and submit it together with proof of their B-BBEE Status as stipulated in the Claim Form in order to obtain preference points for their B-BBEE status.

Note: Failure to submit a valid and original B-BBEE certificate or a certified copy thereof at the Closing Date of this RFQ will result in a score of zero being allocated for B-BBEE.

[Refer clause 19 below for Returnable Documents required]

2.2 B-BBEE Improvement Plan – Not Applicable

2.3 Supplier Development Initiatives - Not Applicable

3 Communication

a) Respondents are warned that a response will be liable for disqualification should any attempt be made by a Respondent either directly or indirectly to canvass any officer(s) or employee of Transnet in respect of this RFQ between the closing date and the date of the award of the business.

b) A Respondent may, however, before the closing date and time, direct any written enquiries relating to the RFQ to the following Transnet employee:

Name: Anne Mongie Email: anne.mongie@transnet.net

c) Respondents may also, at any time after the closing date of the RFQ, communicate with the Regional Supply Chain Manager, Boitumelo Manyakalle on any matter relating to its RFQ response:

Telephone 031 361 1016 Email Boitumelo.manyakalle@transnet.net

Tax Clearance :

The Respondent's original and valid Tax Clearance Certificate must accompany the Quotation. Note that no business shall be awarded to any Respondent whose tax matters have not been declared by SARS to be in order.

4 VAT Registration

The valid VAT registration number must be stated here: _____ *[if applicable].*

5 Legal Compliance

The successful Respondent shall be in full and complete compliance with any and all applicable national and local laws and regulations.

6 Changes to Quotations

Changes by the Respondent to its submission will not be considered after the closing date and time.

7 Pricing

All prices must be quoted in South African Rand on a fixed price basis, excluding VAT.

8 Prices Subject to Confirmation

Prices quoted which are subject to confirmation will not be considered.

9 Negotiations

Transnet reserves the right to undertake post-tender negotiations with selected Respondents or any number of short-listed Respondents.

10 Binding Offer

Any Quotation furnished pursuant to this Request shall be deemed to be an offer. Any exceptions to this statement must be clearly and specifically indicated.

11 Disclaimers

Transnet is not committed to any course of action as a result of its issuance of this RFQ and/or its receipt of a Quotation in response to it. Please note that Transnet reserves the right to:

- modify the RFQ's goods / service(s) and request Respondents to re-bid on any changes;
- reject any Quotation which does not conform to instructions and specifications which are detailed herein;
- disqualify Quotations submitted after the stated submission deadline;
- not necessarily accept the lowest priced Quotation;
- reject all Quotations, if it so decides;
- place an order in connection with this Quotation at any time after the RFQ's closing date;
- award only a portion of the proposed goods / service/s which are reflected in the scope of this RFQ;
- split the award of the order/s between more than one Supplier/Service Provider; or
- make no award at all.

Transnet reserves the right to award business to the highest scoring bidder/s unless objective criteria justify the award to another bidder.

12 Transnet's supplier integrity pact

Transnet's Integrity Pact requires a commitment from suppliers and Transnet that they will not engage in any corrupt and fraudulent practices, anti-competitive practices; and act in bad faith towards each other.

The Integrity Pact also serves to communicate Transnet's Gift Policy as well as the remedies available to Transnet where a Respondent contravenes any provision of the Integrity Pact.

Respondents are required to familiarise themselves with the contents of the Integrity Pact which is available on the Transnet Internet site [www.transnet.net/Tenders/Pages/default.aspx] or on request. Furthermore, Respondents are required to certify that they have acquainted themselves with all the documentation comprising the Transnet Integrity Pact and that they fully comply with all the terms and conditions stipulated in the Transnet Supplier Integrity Pact as follows:

YES		NO	

Should a Respondent need to declare previous transgressions or a serious breach of law in the preceding 5 years as required by Annexure A to the Integrity Pact, such declaration must accompany the Respondent's bid submission.

13 Respondent's Samples Not Applicable

14 Evaluation Criteria

Transnet will utilise the following criteria [not necessarily in this order] in choosing a Supplier/Service Provider, if so required:

Criterion/Criteria	Explanation
Administrative responsiveness	Completeness of response and returnable documents
Substantive responsiveness	Prequalification criteria, if any, must be met and whether the Bid materially complies with the scope and/or specification given. • Previous Experience • Personnel Qualification • Delivery Period • Adequate Workshop Facility
Functionality Threshold	As prescribed in terms of the Preferential Procurement Policy Framework Act (PPPFA), Act 5 of 2000 and its Regulations, Respondents are to note that functionality is included as threshold with a prescribed percentage threshold of 60%. Compliance to specification / quality, previous performance, delivery lead-time will be considered as part of the technical evaluation[complete Annexure A – Technical Questionnaire]

Quality Criteria	Specification	Points allocated
Previous experience	5 years or more 3-5 years' experience 1-3 years' experience 1 year and less experience	40 20 10 0
Personal qualification	Artisan qualification with structural welding codes submitted with tender Artisan qualification only No qualification submitted	20 10 0
Delivery days in lead time	22 working days 23-30 working days 30-50 working days	20 10 0
Adequate workshop facility	500sq meter and more 250-500sq meter 250 and less	20 10 0

TECHNICAL EVALUATION TEAM:

Mahomed Sayid:

Approved: _____

Allan Leaver:

Approved: _____

Thobeka Sibiya

Approved : _____

RFQ FOR SUPPLY, MANUFACTURE AND DELIVER SIGNAL GANTRY STRUCTURE

FOR A PERIOD OF ONCE OFF

ANNEXURE C: TECHNICAL/FUNCTIONALITY CRITERIA

Quality criteria	specification	Number of years	Detail of experience
Previous experience	Number of years and details of previous relevant experience		
Quality criteria	**Specification**	**Yes (submit proof)**	**No**
Personnel qualification	Artisan qualification with structural welding codes to be submitted		
Quality criteria	**Specification**	**Number of days**	
Delivery period	Delivery period in working days from date of tender award		
Quality criteria	**Specification**	**Specify sq. meter size**	
Adequate workshop facility	Square meter size of current workshop facility		

Final weighted evaluation based on 80/20 preference point system as indicated in paragraph Error! Reference source not found.	• Pricing and price basis [firm] - whilst not the sole factor for consideration, competitive pricing and overall level of unconditional discounts[1] will be critical • B-BBEE status of company - Preference points will be awarded to a bidder for attaining the B-BBEE status level of contribution in accordance with the table indicated in Annexure A.

15 Validity Period

Transnet desires a validity period of 90 (ninety) days from the closing date of this RFQ.

This RFQ is valid until _____.

16 Banking Details

BANK: _____

BRANCH NAME / CODE: _____

ACCOUNT HOLDER: _____

ACCOUNT NUMBER: _____

17 Company Registration

Registration number of company / C.C. _____

Registered name of company / C.C. _____

18 Disclosure of Prices Quoted

Respondents must indicate here whether Transnet may disclose their quoted prices and conditions to other Respondents:

YES ☐ NO ☐

19 Returnable Documents

Returnable Documents means all the documents, Sections and Annexures, as listed in the tables below.

a) Respondents are required to submit with their Quotations the **Returnable Documents,** as detailed below.

Failure to provide all these Returnable Documents at the Closing Date and time of this RFQ may result in a Respondent's disqualification. Respondents are therefore urged to ensure that all these Documents are returned with their Quotations.

[1] *Only unconditional discounts will be taken into account during evaluation. A discount which has been offered conditionally will, despite not being taken into account for evaluation purposes, be implemented when payment is effected.*

All Sections, as indicated in the footer of each page, must be signed, stamped and dated by the Respondent. Please confirm submission of these Returnable Documents by so indicating [Yes or No] in the table below:

Returnable Documents	Submitted [Yes or No]
SECTION 1 : Notice to Bidders	
- Valid and original B-BBEE Verification Certificate or certified copy thereof [Large Enterprises and QSEs] Note: failure to provide a valid B-BBEE Verification Certificate at the closing date and time of the RFQ will result in an automatic score of zero for preference	
- Valid and original B-BBEE certificate/sworn affidavit or certified copy thereof from auditor, accounting officer or SANAS accredited Verification Agency [EMEs] Note: failure to provide a valid B-BBEE Verification Certificate at the closing date and time of the RFQ will result in an automatic score of zero being allocated for preference	
- In the case of Joint Ventures, a copy of the Joint Venture Agreement or written confirmation of the intention to enter into a Joint Venture Agreement	
- Original valid Tax Clearance Certificate [Consortia / Joint Ventures must submit a separate Tax Clearance Certificate for each party]	
SECTION 2 : Quotation Form	
SECTION 3: Vendor Application Form	
• Original cancelled cheque or bank verification of banking details	
• Certified copies of IDs of shareholder/directors/members [as applicable]	
• Certified copies of the relevant company registration documents from Companies and Intellectual Property Commission (CIPC)	
• Certified copies of the company's shareholding/director's portfolio	
• Entity's letterhead	
• Certified copy of VAT Registration Certificate [RSA entities only]	
• Certified copy of valid Company Registration Certificate [if applicable]	
Financial Statements signed by your Accounting Officer or Audited Financial Statements for previous 3 years	
ANNEXURE A – B-BBEE Preference Points Claim Form	
ANNEXURE B : Technical Submission/Questionnaire	

Section 2

QUOTATION FORM

I/We_____

hereby offer to supply the goods/services at the prices quoted in the Price Schedule below, in accordance with the conditions related thereto.

I/We agree to be bound by those terms and conditions in:

- the Standard Terms and Conditions for the Supply of Goods or Services to Transnet [available on request]; and
- any other standard or special conditions mentioned and/or embodied in this Request for Quotation.

I/We accept that unless Transnet should otherwise decide and so inform me/us, this Quotation [and, if any, its covering letter and any subsequent exchange of correspondence], together with Transnet's acceptance thereof shall constitute a binding contract between Transnet and me/us.

I/We further agree that if, after I/we have been notified of the acceptance of my/our Quotation, I/we fail to deliver the said goods/service/s within the delivery lead-time quoted, Transnet may, without prejudice to any other legal remedy which it may have, cancel the order and recover from me/us any expenses incurred by Transnet in calling for Quotations afresh and/or having to accept any less favourable offer.

Price Schedule

I/We quote as follows for the goods required, on a "delivered nominated destination" basis, excluding VAT: **[for SERVICES, attach a scope of work & pricing schedule]**

Item No	Description of Goods /Services	Unit of Measure	Quantity	Unit Price (ZAR)	Total Price (ZAR)
1	Lattice Bridge as per CEE-TMD-27	METRE	92.5		
2	Catwalk assembly as per CEE-TMFD-3	METRE	68.5		
3	Signal cage with ladder	METRE	10		

Delivery Lead-Time from date of purchase order : _____ [days/weeks]

Notes to Pricing:

a) All Prices must be quoted in South African Rand, exclusive of VAT

b) To facilitate like-for-like comparison bidders must submit pricing strictly in accordance with this price schedule and not utilise a different format. Deviation from this pricing schedule could result in a bid being disqualified.

c) Please note that should you have offered a discounted price(s), Transnet will only consider such price discount(s) in the final evaluation stage if offered on an unconditional basis.

Section 3

VENDOR APPLICATION FORM

Respondents are to furnish the following documentation and complete the Vendor Application Form below:

1. **Original** cancelled cheque **OR** letter from the Respondent's bank verifying banking details [**with bank stamp]**
2. **Certified** copy of Identity Document(s) of Shareholders/Directors/Members [where applicable]
3. **Certified copies** of the relevant company registration documents from Companies and Intellectual Property Commission (CIPC)
4. **Certified copies** of the company's shareholding/director's portfolio
5. A letter on the company's letterhead confirm physical and postal addresses
6. **Original** valid SARS Tax Clearance Certificate
7. **Certified copy** of VAT Registration Certificate
8. **A valid and original** B-BBEE Verification Certificate / sworn affidavit **or certified copy** thereof meeting the requirements for B-BBEE compliance as per the B-BBEE Codes of Good Practice
9. **Certified copy** of valid Company Registration Certificate [if applicable]

Vendor Application Form

Company trading name						
Company registered name						
Company Registration Number or ID Number if a Sole Proprietor						
Form of entity [√]	CC	Trust	Pty Ltd	Limited	Partnership	Sole Proprietor
VAT number [if registered]						
Company telephone number						
Company fax number						
Company email address						
Company website address						
Bank name			Branch & Branch code			
Account holder			Bank account number			
Postal address						

				Code		
Physical Address						
				Code		
Contact person						
Designation						
Telephone						
Email						
Annual turnover range [last financial year]	< R5 m		R5 - 35 m		> R35 m	
Does your company provide	Products		Services		Both	
Area of delivery	National		Provincial		Local	
Is your company a public or private entity			Public		Private	
Does your company have a Tax Directive or IRP30 Certificate			Yes		No	
Main product or services [e.g. Stationery/Consulting]						

Complete B-BBEE Ownership Details:

% Black ownership		% Black women ownership		% Disabled Black ownership		% Youth ownership	
Does your entity have a B-BBEE certificate			Yes		No		
What is your B-BBEE status [Level 1 to 9 / Unknown]							
How many personnel does the entity employ	Permanent			Part time			

If you are an existing Vendor with Transnet please complete the following:

Transnet contact person	
Contact number	
Transnet Operating Division	

Duly authorised to sign for and on behalf of Company / Organisation:

Name		Designation	
Signature		Date	

TECHNICAL SPECIFICATION.

FABRICATION OF SIGNAL GANTRY LATTICE BRIDGES FOR OHTE RAIL TRACTION.

1. PREAMBLE

Tenders are invited for the supply, fabrication and assembly of five Signal Gantry structures incorporating Lattice Bridge structure as per Drawings CEE-TMGD-1 and CEE-TMD-27 complete with two 6-bolt steel angle mast each as per CEE-TMB-92 for use on the rail network in the Durban, Bayhead area.

2. COMPANY NAME

Transnet Freight Rail (RME) trading as Transnet (Pty) Ltd.

3. EXTENT OF WORK

All steel required for the fabrication will be supplied by Transnet RME. Steel is to be collected at Transnet RME Steel Workshop situated at 130 Eel Road, Bayhead. This tender is for cutting to size, assembly, drilling and welding only.

Structure to be completed and prepared for Hot-Dip Galvanising. Transnet RME to inspect each fabricated structure before release for Hot-Dip Galvanising. Two days notice is required for these arrangements. Contractor to provide transportation for completed structures to Hot Dip Galvaniser at Prospecton.

4. TECHNICAL REQUIREMENTS

All welding to be undertaken by qualified Structural Coded Welder. All welding runs to be sealed for galvanizing.

All segments of each unit to be marked with a unique welded number e.g. MS 01 P1. Numbers will be confirmed at the time of manufacture. **PLEASE NOTE:** numbers to be welded on, no alternative method of marking will be accepted.

Assembled structures to be complete with all fixings required viz. nuts, bolts, washers, U-Bolts, J-Bolts, etc. as required. All additional nuts and bolts for the assembly to be delivered together with the completed item as a package at Transnet RME situated at 130 Eel Road, Bayhead.

4.1) Structure lengths and details as per table hereunder. Lengths to be finalized on site by Project Manager instruction.

No.	Location No.	L/Brdg Length	SIG CAGE	LADDER CAGE	CAT-WALK (m)
1	3/6	24m	-	-	-
2	269	13m	2	2	13
3	4/12	18.5m	3	3	18.5
4		18.5m	3	3	18.5
5	Near RB 25	18.5m	2	2	18.5

5. QUALITY ASSURANCE

Work will be inspected on an ongoing basis during the manufacturing process. Notice to be given at least two days in advance for final inspection before release to galvanizing.

Quality control plan to be completed during each phase of the process for individual lattice bridges.

6. DURATION OF WORKS

Transnet RME requires that this work be completed within six weeks from tender award date. Release of completed structures is to be arranged in advance to speed up delivery.

7. PENALTY FOR LATE COMPLETION

Should the contractor fail to complete the works by the date stipulated in the contract, he shall pay RME a penalty of R 500.00 per day will be levied for each day the work remain incomplete.

8. INVOICING AND PAYMENT

Invoice can be submitted per structure completed. Payment will be thirty days from invoice date as per Transnet procedure. Part payment may be entertained but only for completed fabrications.

9. DRAWINGS

The following drawings form part of this tender:

No.	Drawing No.	No. of Pages
1	CEE-TMD-27	1
2	CEE-TMGD-1	1
3	CEE-TMFD-1	15
4	CEE-TMFD-2	4
5	CEE-TMFD-3	15
6	CEE-TMFB-2	3
7	CEE-TMFB-3	5
8	CEE-TMFB-11	1

10. PRICING

Pricing to include the following:

- All aspects of the welding process including labour, equipment, materials, collection transport, etc to be included in the rate.
- Rate for gantries and catwalks to be quoted per linear metre excluding VAT.
- Rate for signal cages to be quoted per unit excluding VAT.
- Transnet reserves the right to reduce quantities at the time of manufacture.
- Payment will be processed for actual quantity manufactured.

ITEM	RATE PER LINEAR METRE	QUANTITY	COST (RATE X QUANTITY)
LATTICE BRIDGE AS PER CEE-TMD-27	R	92.5m	R
CATWALK ASSEMBLY AS PER CEE-TMFD-3	R	68.5m	R
ITEM	RATE PER UNIT	QUANTITY	COST (RATE X QUANTITY)
SIGNAL CAGE WITH LADDER	R	10	R
TENDER TOTAL			R

ITEM	DESCRIPTION	QTY	STORES ITEM NO	DRG NO CEE-
1	STEEL, FLAT 50 x 10 x "X" L (NOTE 1) ~~(11/12381)~~	2		
2	STEEL, ROUND ø16 x 325 L ~~(11/1771)~~	2		
3	STEEL, FLAT 50 x 10 x 430 L ~~(11/12381)~~	1		
4	STEEL, FLAT 50 x 10 x 180 L ~~(11/12381)~~	2		

AMENDMENTS		
NO	NAME	DATE
1	JP du Plessis	95-05-24
REVISED AND REDRAWN DO REF T95/028		
2	4/3/2003	
REVISED AND REDRAWN. DO REF: CDO/1772		

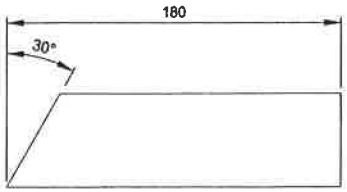

ITEM 4
SCALE 1:2

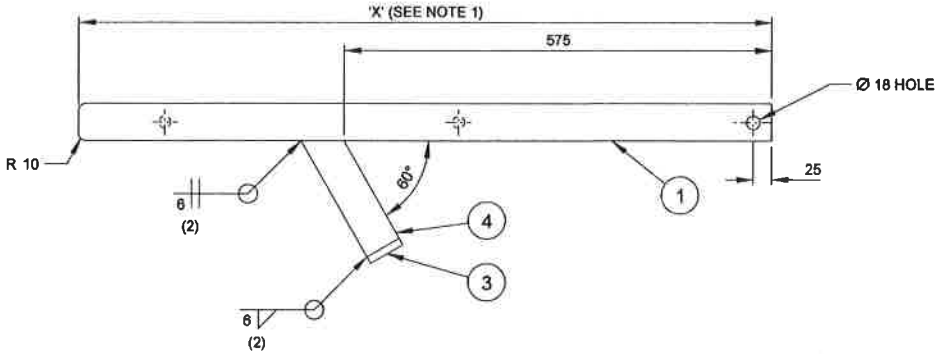

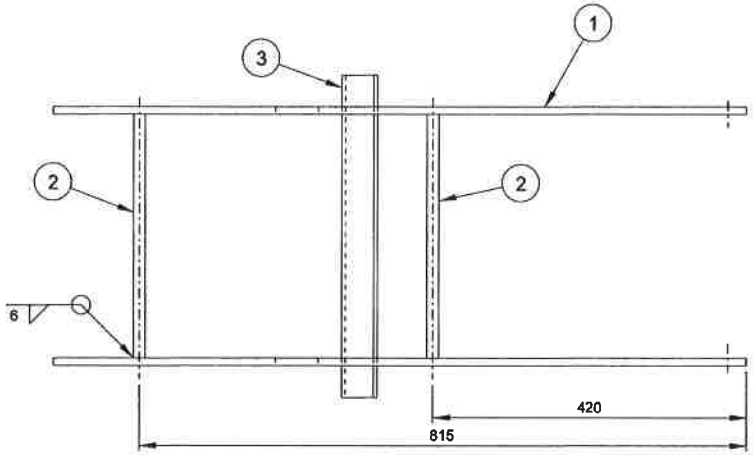

NOTES
1. DIMENSION TO BE DETERMINED ON SITE.
2. FOR MASTER RECORD INDEX SEE DOCUMENT NO. BBB1317.

FINISH
ZINC COAT TO SPEC SANS 121 AFTER WELDING FOR CONDITION IN SITU.

DO REF: T88/042	GEN TOL: LIN ± 1	ANG ± 1°
DRN: J v TONDER	CKD: J SWIEGERS	DATE: 89-05-15
ENG: ————	CED MYHILL	for CHIEF ENG
CENTRAL DRAWING OFFICE	SPOORNET	

LADDER, EXTENSION PIECE
SIGNAL GANTRY STRUCTURE

DIMENSIONS: mm
SCALE: 1:5

A2

DRAWING NO CEE-
TMFB - 11
SHEET - OF -

ITEM	DESCRIPTION	QTY	STORES ITEM NO	DRAWING NO CEE-
1	ARM, SUPPORT	2	-	TMFB-3 SHT 2
2	GATE, SLIDING, ASSEMBLY	1	-	TMFB-3 SHT 3
3	BOLT, ADAPTOR: "LINDAPTOR" TYPE A, M16 LONG TAIL, OR EQUAL (GALV.)	4	-	-
4	BOLT AND NUT, STEEL, GALV. M16 x 20L	4	~~1/~~	-
5	BOLT AND NUT, STEEL, GALV. M16 x 40L	4	~~1/20264~~	-
6	WASHER, STEEL, FLAT, GALV. M16	8	~~1/33680~~	-
7	BARBED WIRE, GALVANISED	*	-	-

* AS REQUIRED

AMENDMENTS		
NO	NAME	DATE
1	JP du Plessis	95-05-24

REVISED AND REDRAWN. ITEM 2 VIEW CHANGED.
DO REF: T95/028

2	4/4/2002	[signature]

REVISED AND REDRAWN.
DO REF: CDO/1772

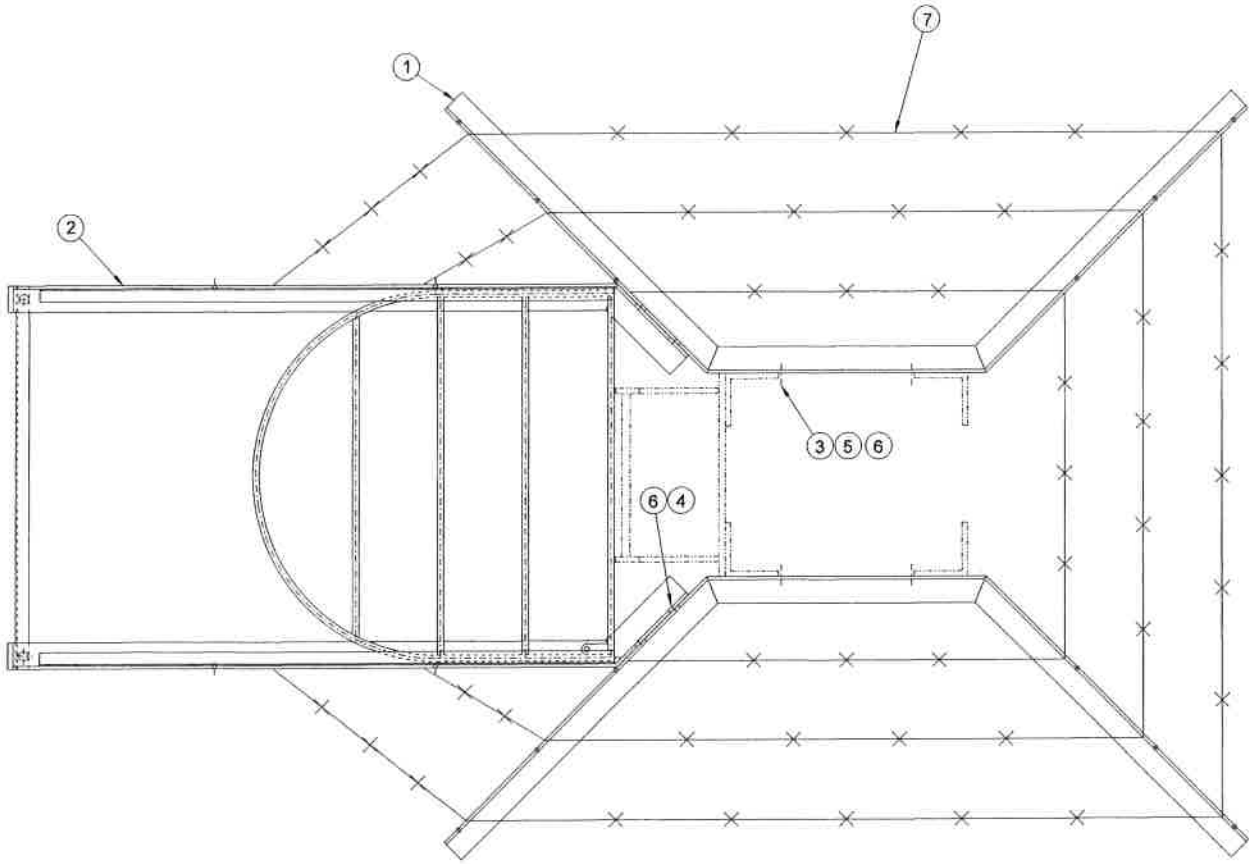

NOTES
1. WHEN ERECTING ITEM 2 MAKE SURE GATE CAN SLIDE FREELY BEFORE TIGHTENING BOLTS.
2. FOR MASTER RECORD INDEX SEE DOCUMENT NO. BBB1317.

DIMENSIONS: mm
SCALE: 1:5

A1

DO REF: T88/042	GEN TOL: LIN ± 1 ANG ± 1°	
DRN: CR MADDISON	CKD: J SWIEGERS	DATE: 89-05-15
ENG: -	CED MYHILL	for CHIEF ENG
CENTRAL DRAWING OFFICE	SPOORNET	

ANTI-CLIMBING DEVICE, LOCKABLE
SIGNAL GANTRY STRUCTURE

DRAWING NO CEE - TMFB - 3

SHEET 1 OF 5

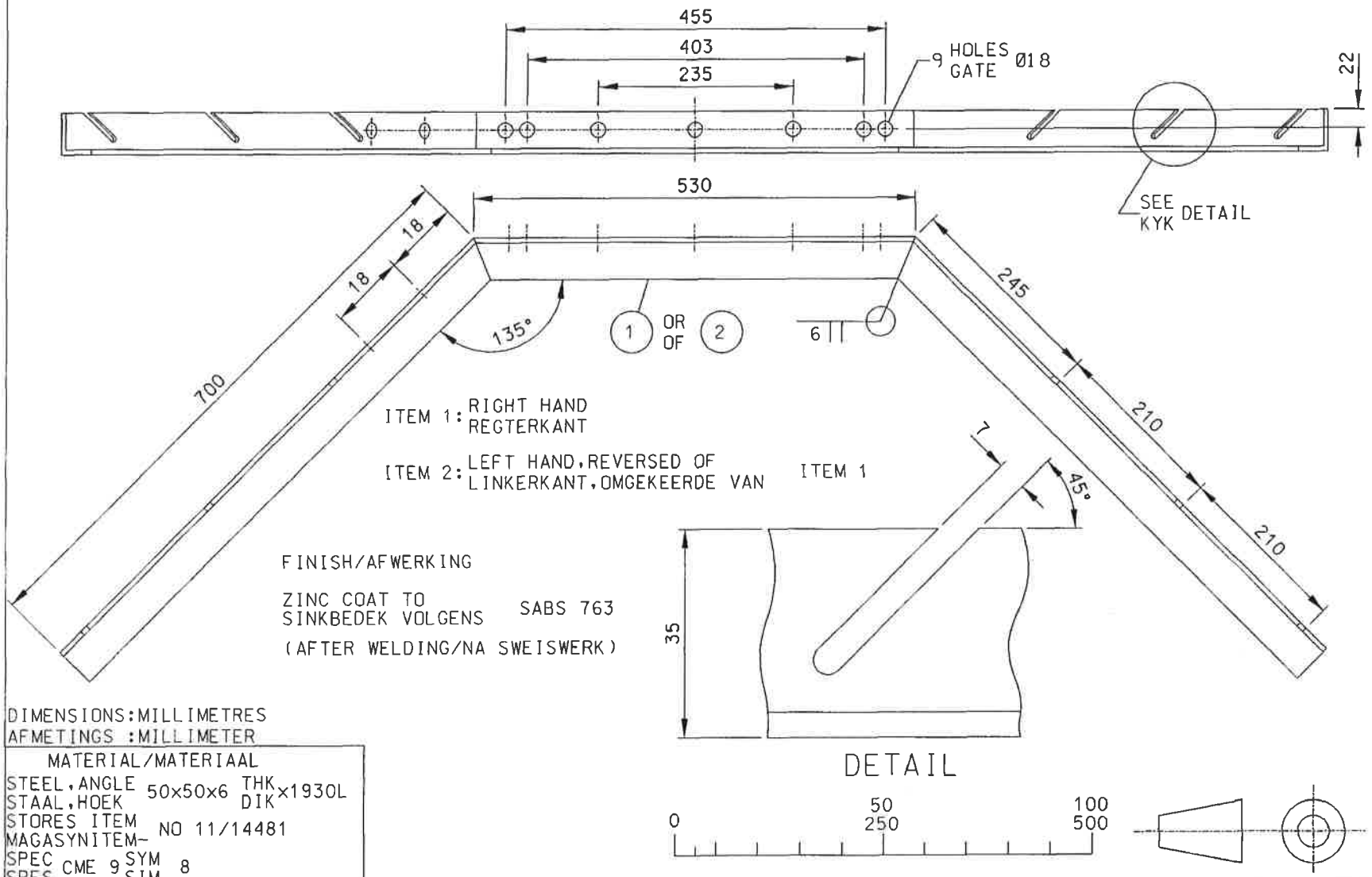

DIMENSIONS: MILLIMETRES
AFMETINGS : MILLIMETER

MATERIAL/MATERIAAL	
STEEL, ANGLE / STAAL, HOEK	50x50x6 THK / DIK x1930L
STORES ITEM / MAGASYNITEM	NO 11/14481
SPEC / SPES	CME 9 SYM / SIM 8

DRN / GET J.VAN TONDER	GEN TOLERANCES: LIN± 1 / ALG TOLERANSIES: ANG/HOEK± 1	
TRCD / NGT CAD/JVT	DO REF / TK-VERW T1/83/78	ENG / IR
CKD / NGS J.SWIEGERS	DATE / DATUM 89-05-15	for C.E.D.MYHILL ns.
CHIEF ELECTRICAL ENGINEER / ELEKTRIESE HOOFINGENIEUR		JOHANNESBURG
SOUTH AFRICAN TRANSPORT SERVICES / SUID-AFRIKAANSE VERVOERDIENSTE		

ELECTRIFICATION TYPES / ELEKTRIFIKASIETIPES: GENERAL/ALGEMEEN

ARM, SUPPORT
LOCKABLE ANTI-CLIMBING DEVICE, SIGNAL GANTRY
ARM, STEUN
SLUITBARE KLIMVERSPERRING, SINJAALSTEIER

AMENDMENTS / WYSIGINGS		
NO	NAME / NAAM	DATE / DATUM

CEE-TMFB-3 SHT / VEL 1

ASSY DRG / SAMEST-TEK

ELECTRIFICATION TYPES REFERENCE DRG NO
CEE-MA-26 SH 7B
ELEKTRIFIKASIETIPES VERWYSINGSTEK-NO
CEE-MA-369 VEL 7B

STORES ITEM / MAGASYNITEM NO

DRAWING / TEKENING NO CEE-TMFB-3

SHEET / VEL 2 OF / VAN 5

A3

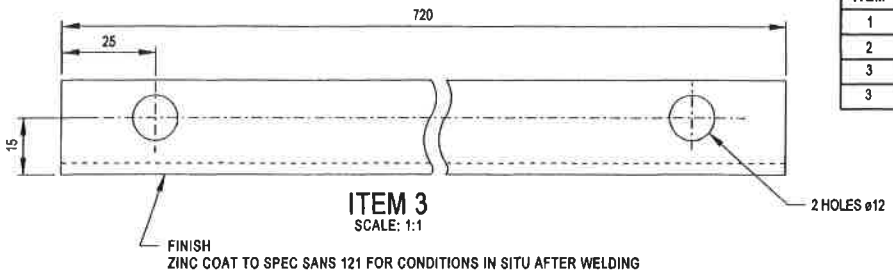

ITEM 3
SCALE: 1:1

FINISH
ZINC COAT TO SPEC SANS 121 FOR CONDITIONS IN SITU AFTER WELDING

ITEM	DESCRIPTION	QTY	STORES ITEM NO	DRAWING NO CEE-
1	GATE, SLIDING	1	-	TMFB-3 SHT 4
2	GUIDE, SLIDING GATE (LH & RH)	2	-	TMFB-3 SHT 5
3	STEEL, ANGLE 25 x 25 x 3 x 720 ~~11/14432~~	1	-	-
3	BOLT AND NUT, STEEL, GALV. M10 x 25L	2	~~11/43518~~	-

AMENDMENTS		
NO	NAME	DATE
1	JP du Plessis	95-05-24
REVISED AND REDRAWN. ITEM 1 PROFILE REVISED. DO REF: T95/028		
2	4/6/2000	
REVISED AND REDRAWN. DO REF: CDO/1772		

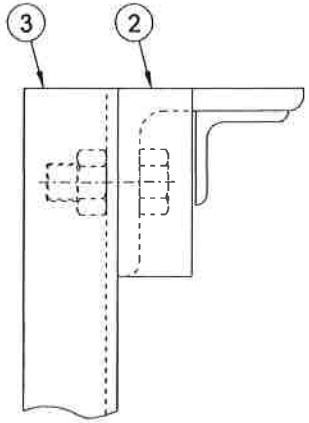

DETAIL Z-Z
SCALE: 1:1

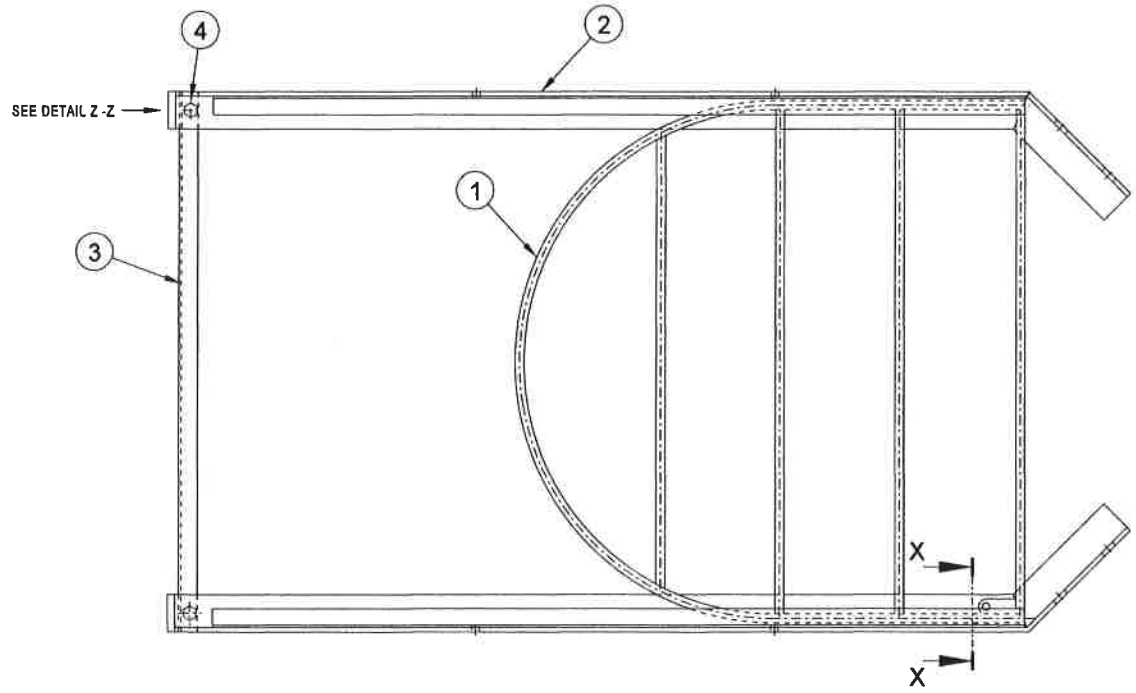

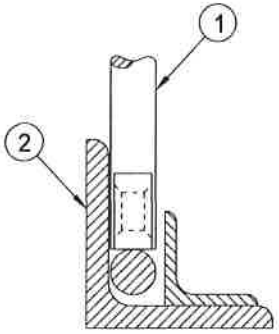

SECTION X-X
SCALE: 1:1

NOTE
FOR MASTER RECORD INDEX SEE DOCUMENT NO. BBB1317.

DIMENSIONS: mm
SCALE: 1:5

A2

DO REF: T88/042	GEN TOL: LIN ± 1	ANG ± 1°	
DRN: C MADDISON	CKD: J SWIEGERS	DATE: 89-05-15	
ENG: -	CED MYHILL	for CHIEF ENG	
CENTRAL DRAWING OFFICE	SPOORNET		

GATE, SLIDING. ASSEMBLY
LOCKABLE ANTI-CLIMBING DEVICE, SIGNAL GANTRY

DRAWING NO CEE -
TMFB - 3
SHEET 3 OF 5

ITEM	DESCRIPTION	QTY	STORES ITEM NO	DRAWING NO CEE-
1	STEEL, ROUND ø10 x 1 750L ~~11/2739~~	1	-	-
2	STEEL, ROUND ø10 x 670L ~~11/2739~~	3	-	-
3	STEEL, ROUND ø10 x 609L ~~11/2739~~	1	-	-
4	STEEL, FLAT 50 x 10 x 20L ~~11/12361~~	1	-	-

AMENDMENTS		
NO	NAME	DATE
1	JP du Plessis	95-05-24
REVISED AND REDRAWN. ITEM 1, 2 & 3 WERE ø12. DO REF: T95/028		
2	4/8/2003	
REVISED AND REDRAWN. DO REF: CDO/1772		

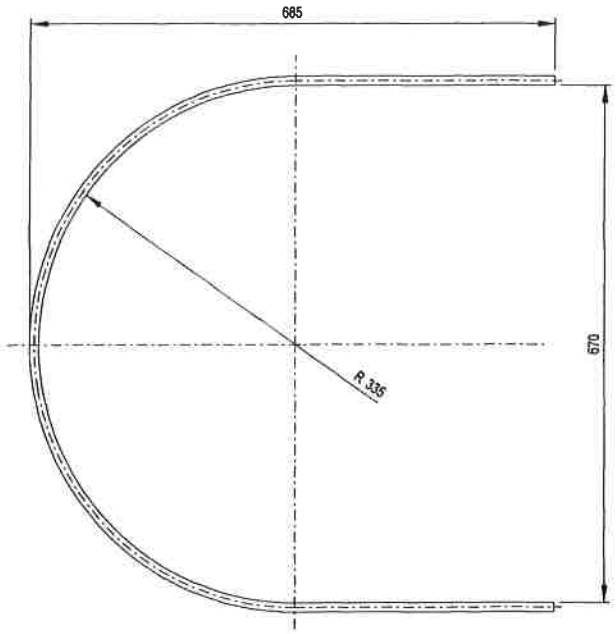

ITEM 1

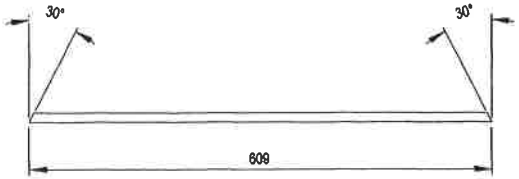

ITEM 3

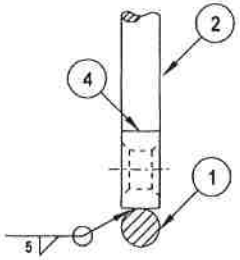

SECTION X - X

SCALE: 1:1

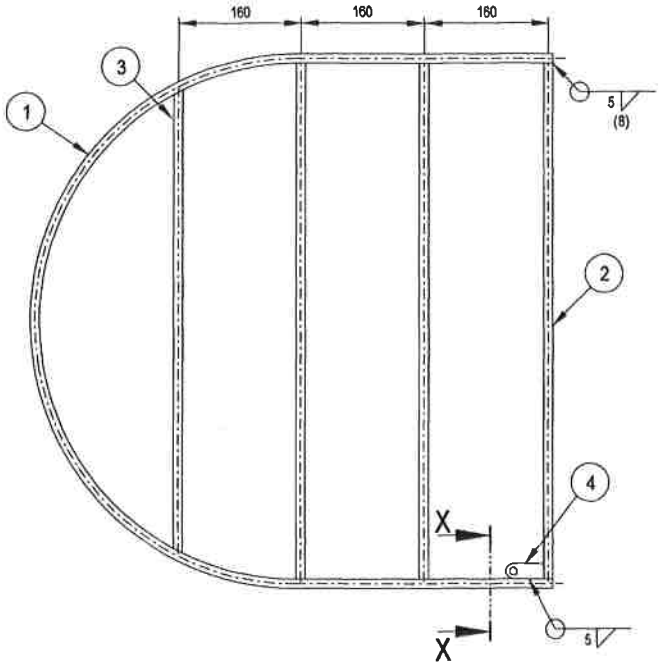

ASSEMBLY

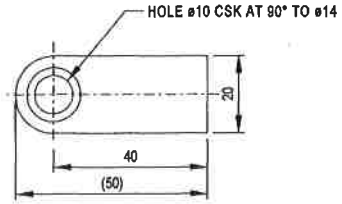

ITEM 4

SCALE: 1:1

FINISH
ZINC COAT TO SPEC SANS 121 FOR CONDITIONS IN SITU AFTER WELDING

NOTE
FOR MASTER RECORD INDEX SEE DOCUMENT NO. BBB1317.

DO REF: T88/042	GEN TOL: LIN ± 1	ANG ± 1°
DRN: C MADDISON	CKD: J SWIEGERS	DATE: 89-05-15
ENG: -	CED MYHILL	for CHIEF ENG
CENTRAL DRAWING OFFICE	SPOORNET	

GATE, SLIDING
LOCKABLE ANTI-CLIMBING DEVICE

DIMENSIONS: mm
SCALE: 1:5

A2

DRAWING NO CEE -
TMFB - 3

SHEET 4 OF 5

ITEM	DESCRIPTION/BESKRYWING	QTY HVLD	STORES ITEM NO MAGASYNITEM-	DRG TEK NO CEE-
1	STEEL, ANGLE STAAL, HOEK 50x50x6 THK DIK x1330L 11/14481	1		
2	STEEL, ANGLE STAAL, HOEK 50x50x6 THK DIK x1330L 11/14481	1		
3	STEEL, ANGLE STAAL, HOEK 25x25x3 THK DIK x1085L 11/14432	1		
4	STEEL, FLAT STAAL, PLAT 50x10 THK DIK x20L 11/12381	1		

AMENDMENTS WYSIGINGS		
NO	NAME NAAM	DATE DATUM

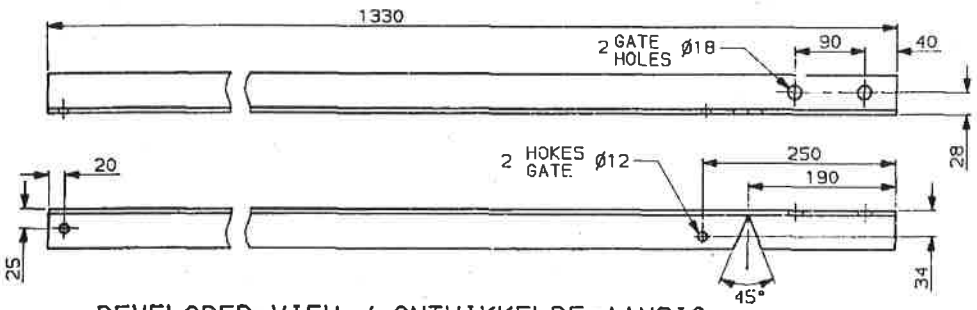

DEVELOPED VIEW / ONTWIKKELDE AANSIG

FINISH/AFWERKING

ZINC COAT TO SINKBEDEK VOLGENS SABS 763 AFTER WELDING NA SWEISWERK

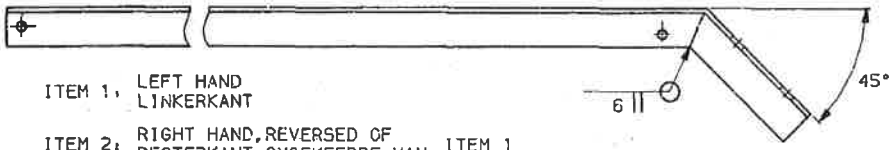

ITEM 1: LEFT HAND / LINKERKANT

ITEM 2: RIGHT HAND, REVERSED OF REGTERKANT, OMGEKEERDE VAN ITEM 1

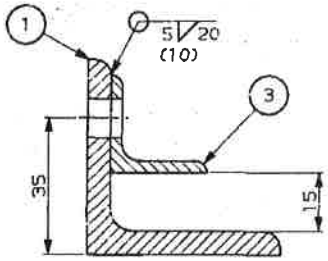

SECTION X-X
DEURSNEE

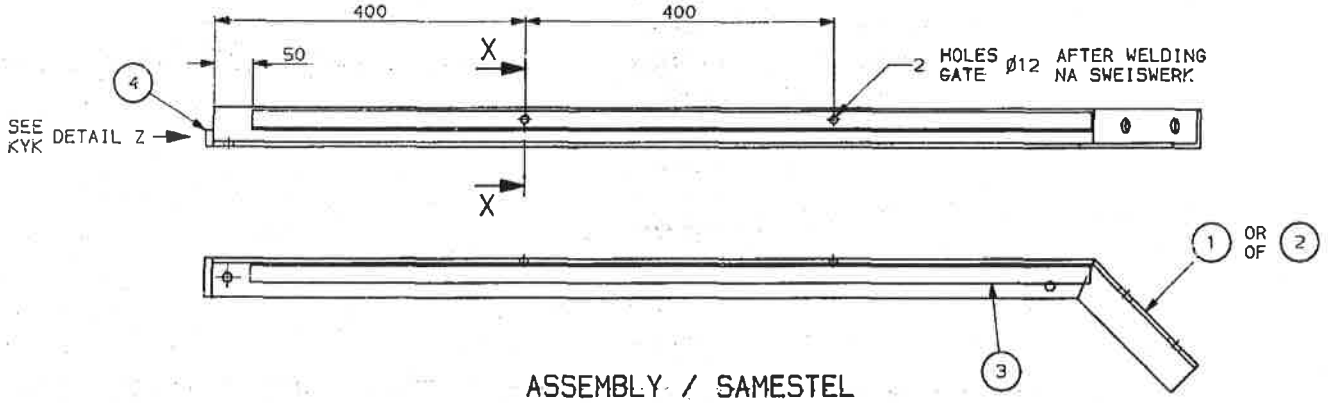

ASSEMBLY / SAMESTEL

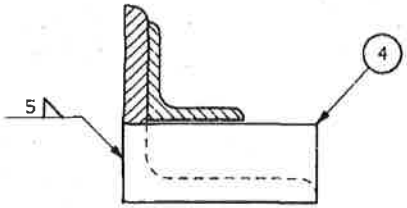

DETAIL Z

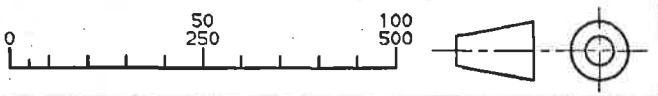

DIMENSIONS: MILLIMETRES
AFMETINGS: MILLIMETER

DRN GET C.MADDISON	GEN TOLERANCES: LIN± 1 ALG TOLERANSIES: ANG/HOEK± 1°		
TRCD NGT CAD	DO REF TK-VERW T88/42	ENG IR	
CKD NGS J.SWIEGERS	DATE DATUM 89-05-15	C.E.D. Mgr: for ns.	
CHIEF ELECTRICAL ENGINEER ELEKTRIESE HOOFINGENIEUR		JOHANNESBURG	
SOUTH AFRICAN TRANSPORT SERVICES SUID-AFRIKAANSE VERVOERDIENSTE			

ELECTRIFICATION TYPES / ELEKTRIFIKASIETIPES: GENERAL/ALGEMEEN

GUIDE, SLIDING GATE
LOCKABLE ANTI-CLIMBING DEVICE
GIDS, SKUIFHEK-
SLUITBARE KLIMVERSPERRING

CEE-TMFB-3 SHT VEL 1

ASSY DRG SAMEST-TEK

ELECTRIFICATION TYPES REFERENCE DRG NO CEE-MA-26 SH 7B
ELEKTRIFIKASIETIPES VERWYSINGSTEK-NO CEE-MA-369 VEL 7B

STORES ITEM MAGASYNITEM NO

DRAWING TEKENING NO CEE-TMFB-3

SHEET VEL 5 OF VAN 5

ITEM	DESCRIPTION	QTY	STORES ITEM No	DRG No CEE-
1	LADDER	1	———	TMFD-2 SHT 2
2	SUPPORT, BACK	2	———	TMFD-2 SHT 3
3	U-BOLT, M16: WITH NUTS & WASHERS	2	———	TMFD-2 SHT 4

AMENDMENTS		
NO	NAME	DATE
1	JP du Plessis	95-05-24
DRG UPDATED, QTY'S OF ITEMS 2 & 3 WERE 4. DO REF: T95/028		
2	4/6/2003	
REVISED AND REDRAWN. DO REF: CDO/1772		

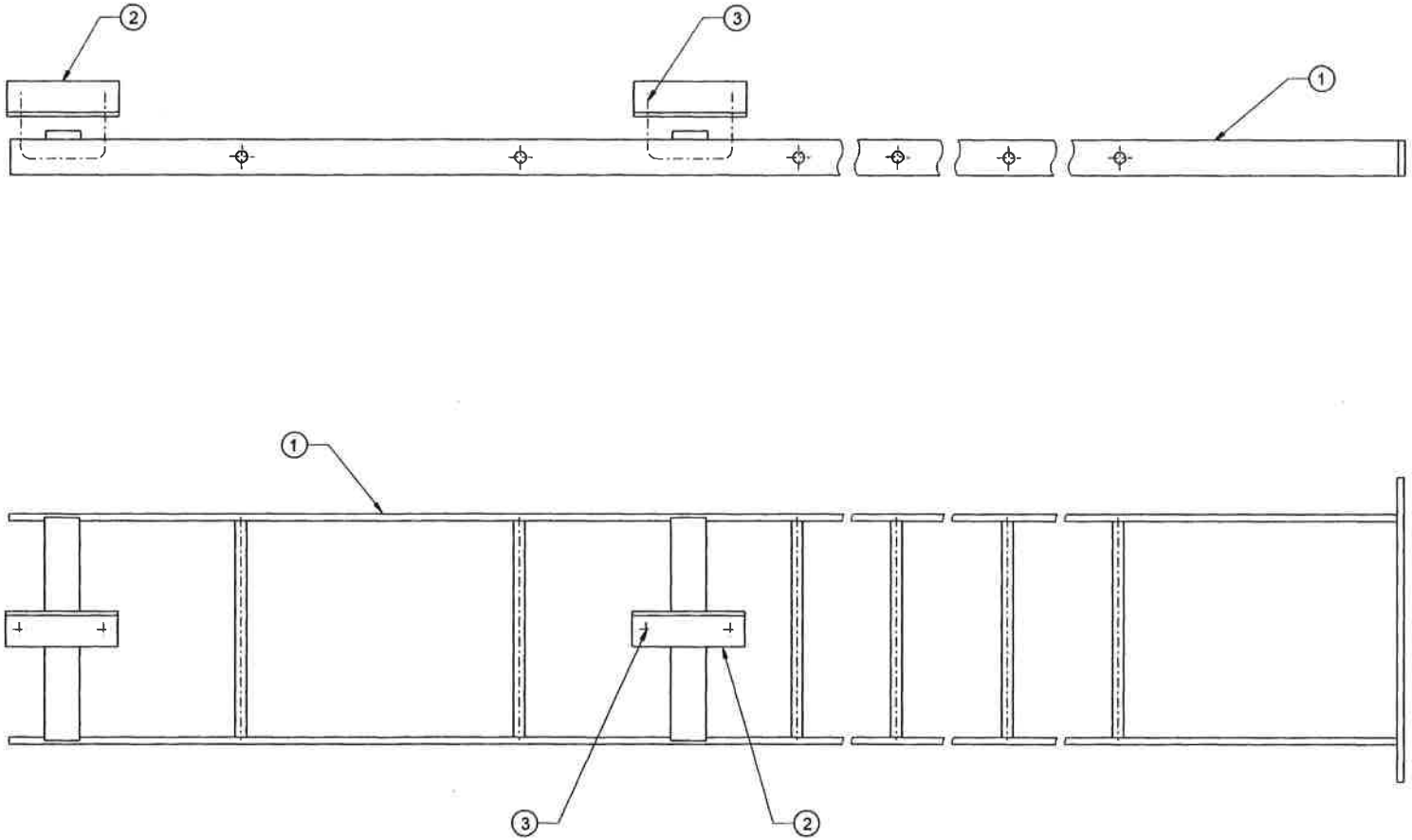

NOTE
FOR MASTER RECORD INDEX SEE DOCUMENT NO. BBB1317.

DO REF: T88/042	GEN TOL: LIN± 1	ANG± 1°
DRN: J V T	CKD: J SWEGERS	DATE: 89-05-15
ENG: -	C E D MYHILL	for CHIEF ENG
CENTRAL DRAWING OFFICE	SPOORNET	

LADDER ASSEMBLY, SIGNAL CAGE.

SIGNAL GANTRY STRUCTURE

DIMENSIONS: mm
SCALE: 1:5

A2

DRAWING NO CEE-TMFD-2

SHEET 1 OF 4

ITEM	DESCRIPTION		QTY	STORES ITEM No	DRG No CEE-
1	STEEL, FLAT 50 x 10 x 2 700L	~~11/12381~~	2		———
2	STEEL, ROUND ø16 x 305L	~~11/1771~~	6		———
3	STEEL, FLAT 50 x 10 x 430L	~~11/12381~~	1		———
4	STEEL, FLAT 50 x 12 x 315L	~~11/12588~~	2		———

AMENDMENTS		
NO	NAME	DATE
1	JP du Plessis	95-05-24
DRG UPDATED, QTY OF ITEM 2 WAS 5. DO REF: T95/028		
2	[illegible]	[illegible]
REVISED AND REDRAWN. SPAN OF DIMENSION 2 700 ON SIDE VIEW CHANGED. DO REF: CDO/1772		

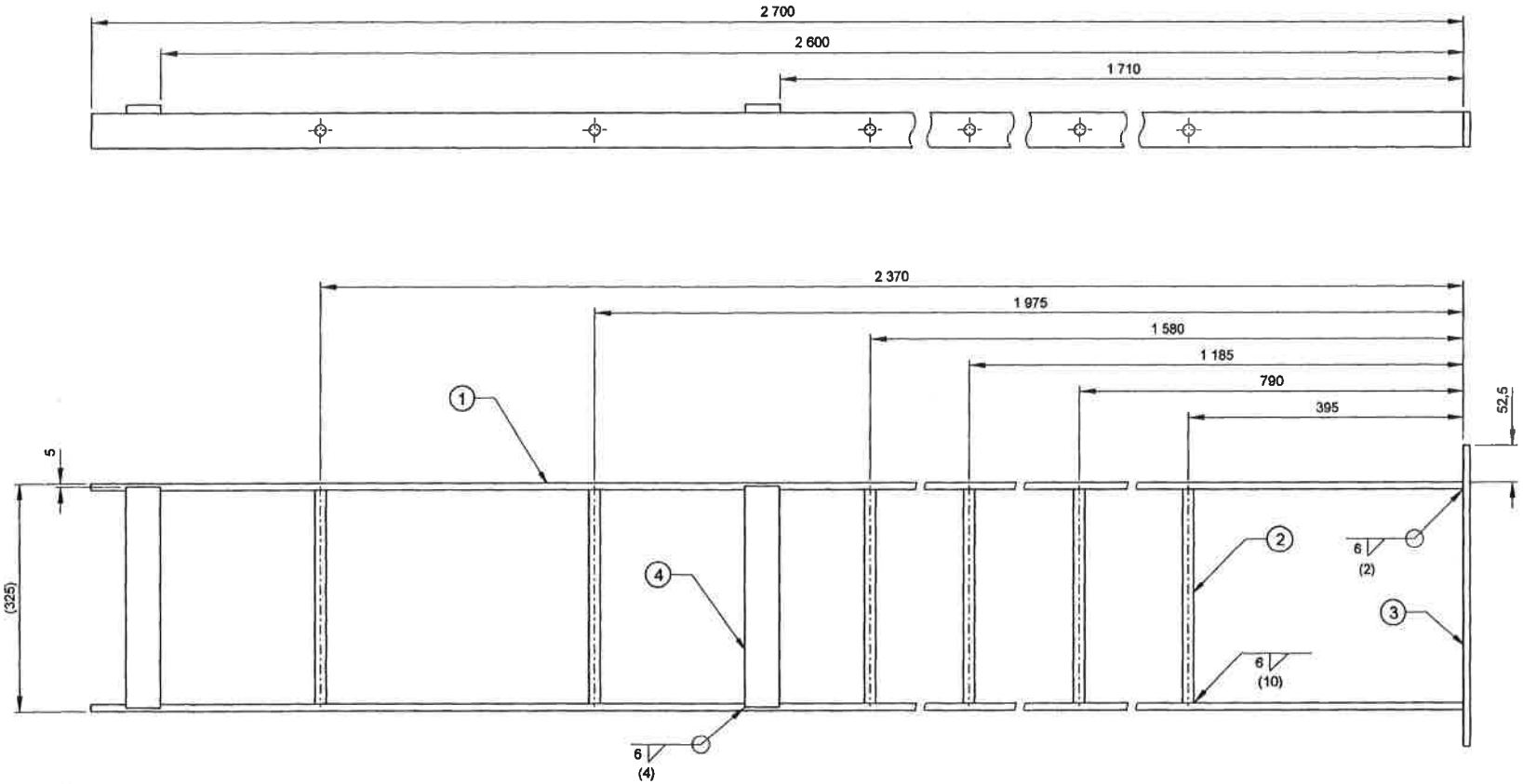

FINISH
ZINC COAT TO SPEC SANS 121 FOR CONDITIONS IN SITU.

NOTE
FOR MASTER RECORD INDEX SEE DOCUMENT NO. BBB1317.

DO REF: T88/042	GEN TOL: LIN± 1	ANG± 1°	
DRN: J V T	CKD: J SWIEGERS	DATE: 89-05-15	
ENG: -	C E D MYHILL	for CHIEF ENG	
CENTRAL DRAWING OFFICE	SPOORNET		

LADDER, SIGNAL CAGE
SIGNAL GANTRY STRUCTURE

DIMENSIONS: mm
SCALE: 1:5

A2

DRAWING NO CEE-
TMFD-2
SHEET 2 OF 4

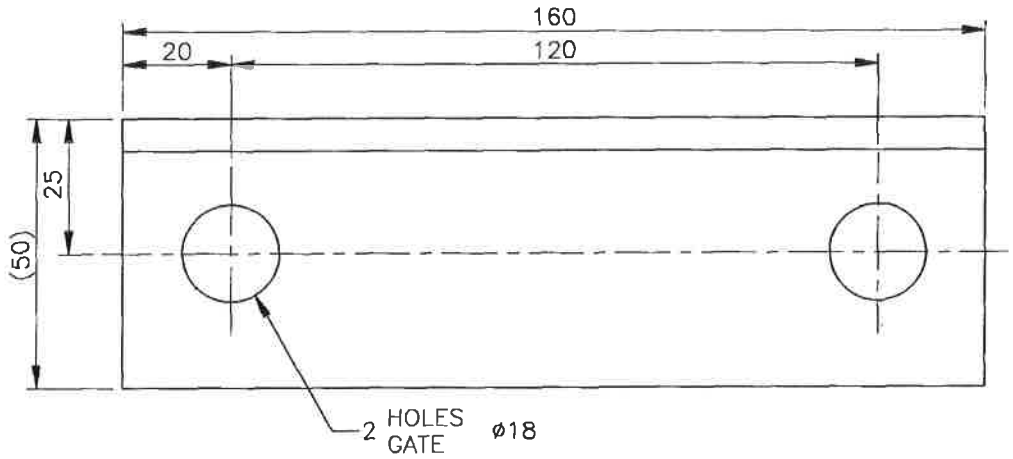

AMENDMENTS WYSIGINGS		
NO	NAME NAAM	DATE DATUM

DIMENSIONS:MILLIMETRES
AFMETINGS :MILLIMETER

FINISH/AFWERKING

ZINC COAT TO SINKBEDEK VOLG. SABS 763

CEE–TMFD–2 SHT VEL 1

ASSY DRG
SAMEST–TEK

ELECTRIFICATION TYPES
REFERENCE DRG NO
CEE–MA–26 SH 7B
ELEKTRIFIKASIETIPES
VERWYSINGSTEK–NO
CEE–MA–369 VEL 7B

STORES ITEM
MAGASYNITEM NO

DRAWING
TEKENING NO CEE–TMFD–2

SHEET VEL 3 OF VAN 4

MATERIAL/MATERIAAL	
STEEL,ANGLE STAAL,HOEK	50x50x6 THK DIK
STORES ITEM MAGASYNITEM–	NO 11/14481
SPEC SPES	CME 9 SYM SIM 8

DRN GET J.VAN TONDER	GEN TOLERANCES:LIN± 1 ALG TOLERANSIES:ANG/HOEK± ——	
TRCD NGT CAD/JVT	DO REF TK–VERW T88/42	ENG IR ——
CKD NGS J.SWIEGERS	DATE DATUM 89–05–15	for C.E.D.MYHILL ns.
CHIEF ELECTRICAL ENGINEER ELEKTRIESE HOOFINGENIEUR		JOHANNESBURG
SOUTH AFRICAN TRANSPORT SERVICES SUID–AFRIKAANSE VERVOERDIENSTE		

ELECTRIFICATION TYPES / ELEKTRIFIKASIETIPES: GENERAL/ALGEMEEN

SUPPORT,BACK
SIGNAL CAGE LADDER
STEUN,RUG–
SINJAALHOKLEER

A3

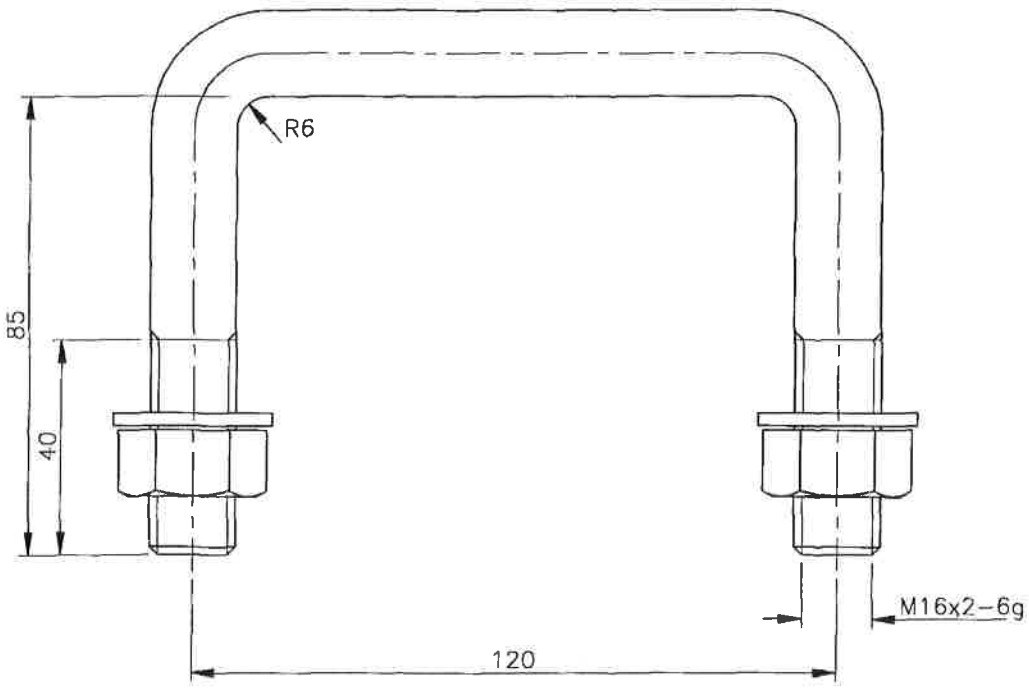

AMENDMENTS WYSIGINGS		
NO	NAME NAAM	DATE DATUM

DIMENSIONS:MILLIMETRES
AFMETINGS :MILLIMETER

FINISH/AFWERKING

ZINC COAT TO SINKBEDEK VOLG. SABS 763

0 50 100

MATERIAL/MATERIAAL	
STEEL,ROUND STAAL,ROND	ø16x290L
STORES ITEM MAGASYNITEM–	NO 11/1771
SPEC SPES CME 9	SYM SIM 7

DRN GET J.VAN TONDER	GEN TOLERANCES:LIN± 1 ALG TOLERANSIES:ANG/HOEK± ——		
TRCD NGT CAD/JVT	DO REF TK–VERW T88/42	ENG IR ——	
CKD NGS J.SWIEGERS	DATE DATUM 89–05–15	C.E.D.MYHILL for ns.	
CHIEF ELECTRICAL ENGINEER ELEKTRIESE HOOFINGENIEUR		JOHANNESBURG	
SOUTH AFRICAN TRANSPORT SERVICES SUID–AFRIKAANSE VERVOERDIENSTE			

ELECTRIFICATION TYPES / ELEKTRIFIKASIETIPES: GENERAL/ALGEMEEN

U–BOLT,M16: WITH NUTS & WASHERS
SIGNAL CAGE LADDER
U–BOUT,M16: MET MOERE & WASTERS
SINJAALHOKLEER

CEE–TMFD–2 SHT VEL 1

ASSY DRG SAMEST–TEK

ELECTRIFICATION TYPES
REFERENCE DRG NO
CEE–MA–26 SH 7B
ELEKTRIFIKASIETIPES
VERWYSINGSTEK–NO
CEE–MA–369 VEL 7B

STORES ITEM MAGASYNITEM NO

DRAWING TEKENING NO CEE–TMFD–2

SHEET VEL 4 OF VAN 4

A3

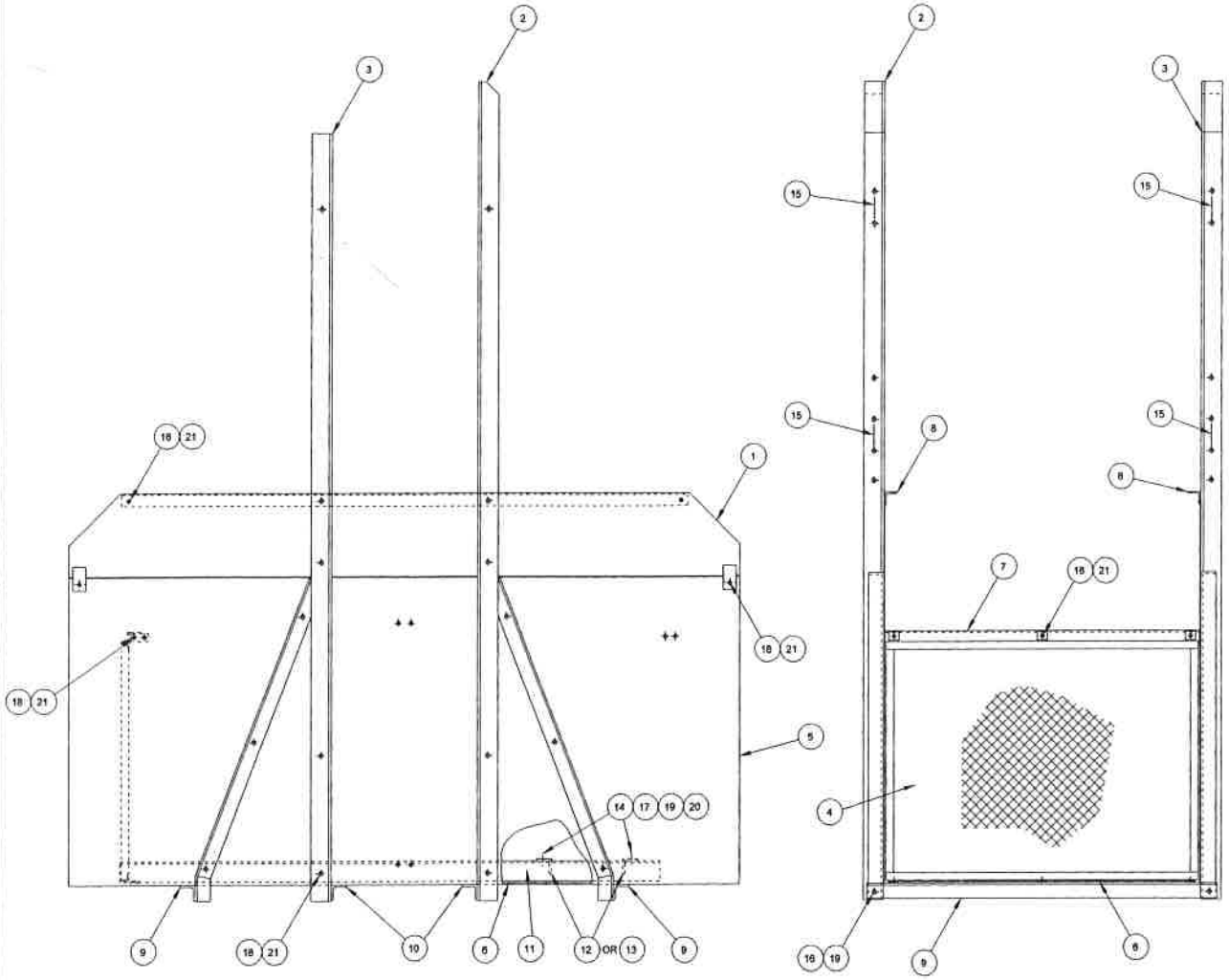

ITEM	DESCRIPTION	QTY	STORES ITEM NO	DRG NO CEE-
1	SIDE SHIELD EXTENSION	2	———	TMFD-1 SHT 2
2	CAGE MEMBER RH	2	———	TMFD-1 SHT 3
3	CAGE MEMBER LH	2	———	TMFD-1 SHT 4
4	SCREEN	1	———	TMFD-1 SHT 5
5	SIDE SHIELD	2	———	TMFD-1 SHT 6
6	CAGE FLOOR PLATE	1	———	TMFD-1 SHT 7
7	HANDRAIL	2	———	TMFD-1 SHT 8
8	STIFFENER	2	———	TMFD-1 SHT 9
9	SUPPORT, OUTER, FLOOR	2	———	TMFD-1 SHT 10
10	SUPPORT, INNER, FLOOR	2	———	TMFD-1 SHT 11
11	BRACKET, MOUNTING OF EQUIPMENT	2	———	TMFD-1 SHT 12
12	BRACKET, MOVEABLE, EQUIPMENT 1 234mm	2	———	TMFD-1 SHT 13
13	BRACKET, MOVEABLE, EQUIPMENT 1 834mm	2	———	TMFD-1 SHT 14
14	BOLT, HOOK, M16 & HEX. NUT	4	54/3479	TX-14 ITEM 4
15	U-BOLT, M20: WITH NUTS & WASHERS	8	———	TMFD-1 SHT 15
16	BOLT, STEEL, HEX. HD. & NUT, GALV. M20 x 45L	8	~~1/20276~~	———
17	BOLT, STEEL, HEX. HD. & NUT, GALV. M16 x 40L	4	~~1/20254~~	———
18	BOLT, STEEL, HEX. HD. & NUT, GALV. M12 x 40L	59	~~1/20242~~	———
19	WASHER, FLAT, STEEL, BLACK, ROUND, GALV. M20	12	~~1/33072~~	———
20	WASHER, FLAT, STEEL, BLACK, ROUND, GALV. M16	4	~~1/33060~~	———
21	WASHER, FLAT, STEEL, BLACK, ROUND, GALV. M12	53	~~1/33058~~	———

NOTE
FOR MASTER RECORD INDEX SEE DOCUMENT NO. BBB1317.

AMENDMENTS		
NO	NAME	DATE
1	JP du Plessis	95 - 05 - 24
	REVISED AND REDRAWN ITEM 14 CHANGED. DO REF: T95 / 028	
2		
	REVISED AND REDRAWN DO REF: CDO/1772	

DO REF: T88 / 042	GEN TOL: LIN ± -	ANG ± -
DRN: J V T	CKD: J SWEGERS	DATE: 89 - 05 - 15
ENG: ———	C E D MYHILL	for CHIEF ENG

CENTRAL DRAWING OFFICE — SPOORNET

SIGNAL CAGE
SIGNAL GANTRY STRUCTURE

DIMENSIONS: mm
SCALE: 1:10

A1

DRAWING NO CEE-
TMFD - 1
SHEET 1 OF 15

ITEM	DESCRIPTION	QTY	STORES ITEM NO	DRG No. CEE-
1	STEEL, SHEET, 325 x 2 642L x 3THK ~~(11/11072)~~	1		
2	STEEL, FLAT, 50 x 6 x 95L ~~(11/12279)~~	2		

AMENDMENTS		
NO	NAME	DATE
1	JP du Plessis	95-05-24
REVISED AND REDRAWN. DO REF T95/028		
2	4/9/2003	
REVISED AND REDRAWN. DO REF: CDO/1772		

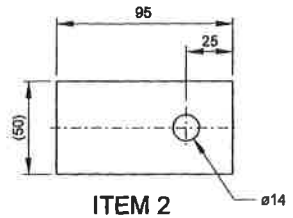

ITEM 2
SCALE: 1:2

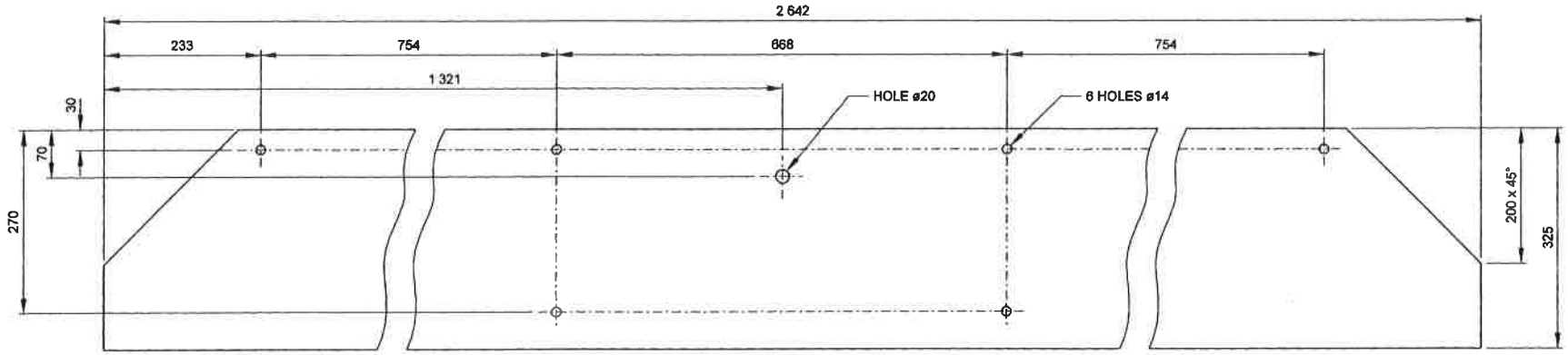

ITEM 1

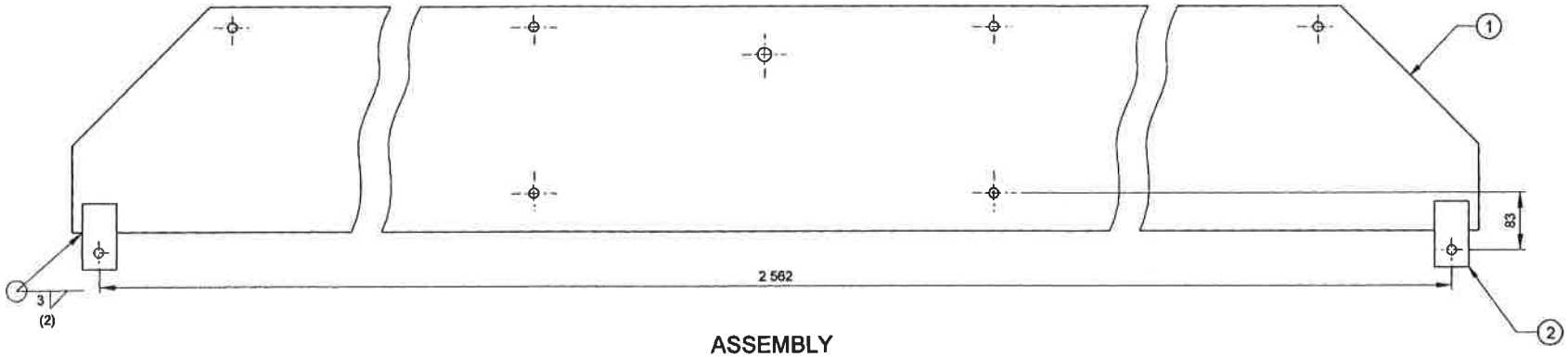

ASSEMBLY

FINISH
ZINC COAT TO SPEC SANS 121 AFTER WELDING FOR CONDITIONS IN SITU.

NOTE
FOR MASTER RECORD INDEX SEE DOCUMENT NO. BBB1317.

DO REF: T88/042	GEN TOL: LIN± 1 ANG± 1°	
DRN: J V T	CKD: J SWIEGERS	DATE: 89-05-15
ENG: ———	C E D MYHILL	for CHIEF ENG
CENTRAL DRAWING OFFICE	SPOORNET	

SIDE SHIELD EXTENSION

SIGNAL CAGE

DIMENSIONS: mm
SCALE: 1:5

A2

DRAWING NO CEE-
TMFD - 1
SHEET 2 OF 15

ITEM	DESCRIPTION	QTY	STORES ITEM NO	DRG NO CEE-
1	STEEL, ANGLE 70 x 70 x 8 x 2 795L (SEE NOTE 1) ~~(11/)~~	1		
2	STEEL, ANGLE 60 x 60 x 8 x 1 388L ~~(11/14483)~~	1		

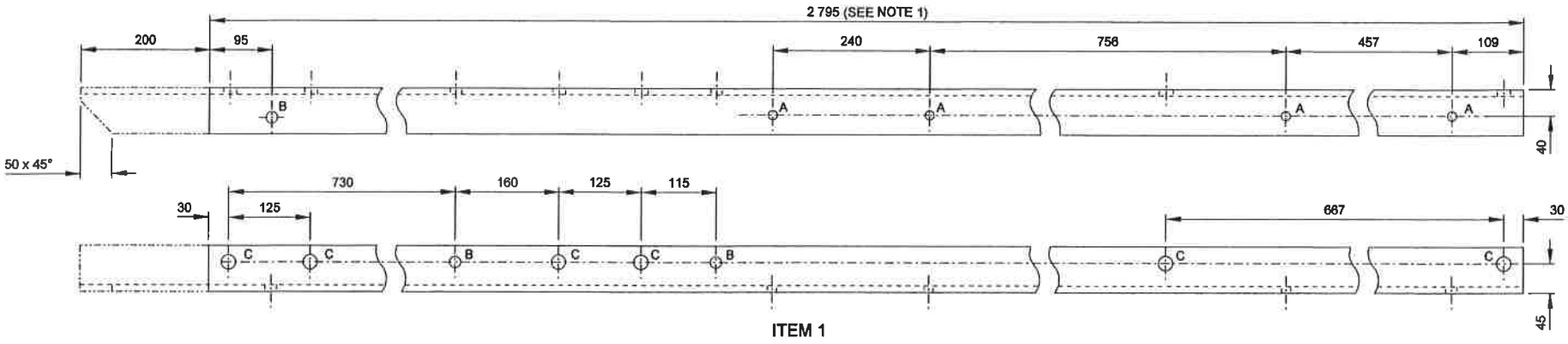

ITEM 1

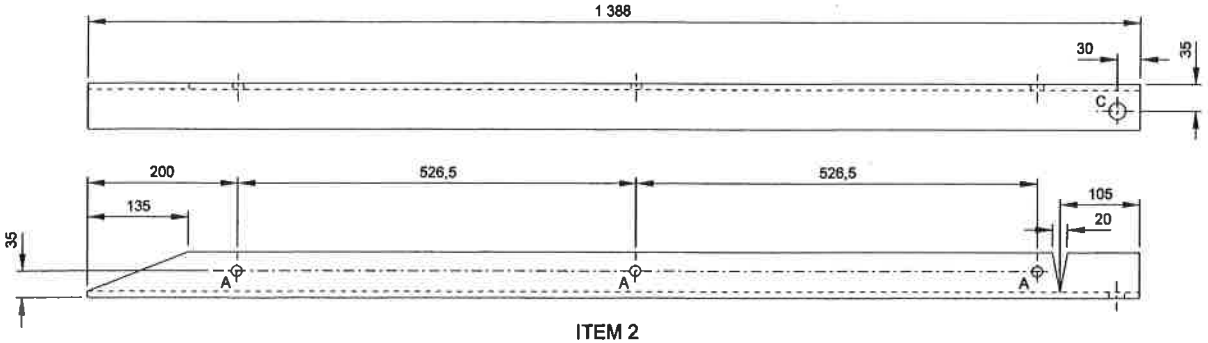

ITEM 2

LEGEND

A = ø14
B = ø18
C = ø22
} HOLES

FINISH
ZINC COAT TO SANS 121 FOR CONDITIONS
IN SITU AFTER WELDING.

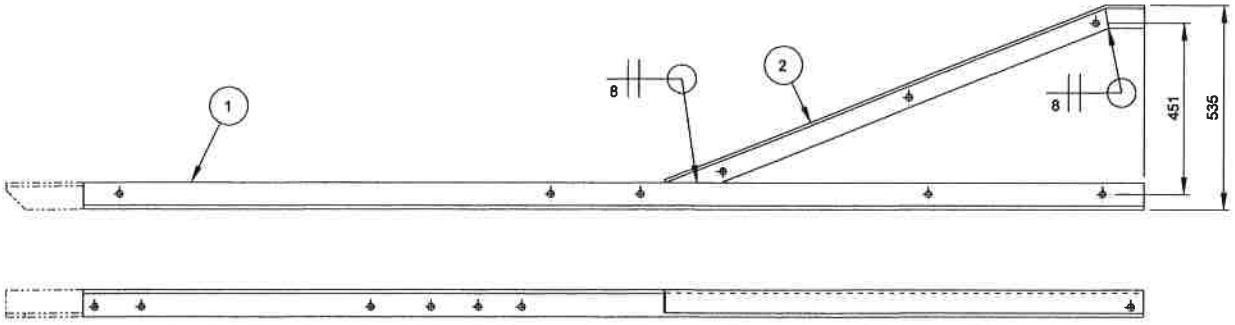

ASSEMBLY
SCALE: 1:10

NOTES
1. ADD 200mm TO THIS DIMENSION WHEN REQUIRED FOR EASE OF ERECTING CAGE.
2. FOR MASTER RECORD INDEX SEE DOCUMENT NO. BBB1317.

AMENDMENTS		
NO	NAME	DATE
1	JP du Plessis	95 - 05 - 24
REVISED AND REDRAWN. NOTE ADDED. DO REF: T95 / 028		
2	2/6/2003	
REVISED AND REDRAWN. DO REF: CDO/1772		

DO REF: T88 / 042	GEN TOL: LIN ± 1	ANG ± 1°
DRN: J V T	CKD: J SWIEGERS	DATE: 89 - 05 - 15
ENG: -	C E D MYHILL	for CHIEF ENG
CENTRAL DRAWING OFFICE	SPOORNET	

CAGE MEMBER RH

SIGNAL CAGE

DIMENSIONS: mm
SCALE: 1:5

A2

DRAWING NO CEE-
TMFD - 1
SHEET 3 OF 15

ITEM	DESCRIPTION	QTY	STORES ITEM NO	DRG NO CEE-
1	STEEL, ANGLE 70 x 70 x 8 x 2 795L (SEE NOTE 1) ~~(11/)~~	1		
2	STEEL, ANGLE 60 x 60 x 8 x 1 388L ~~(11/14493)~~	1		

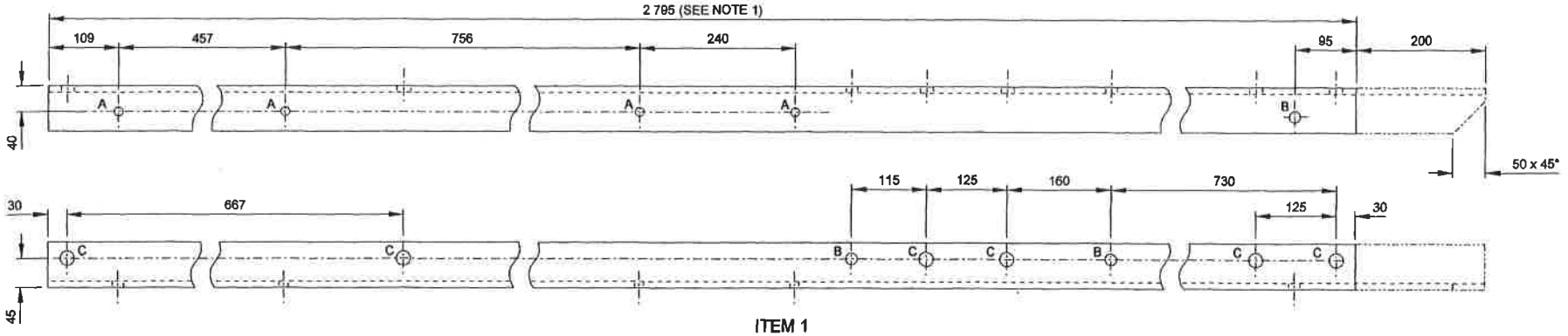

ITEM 1

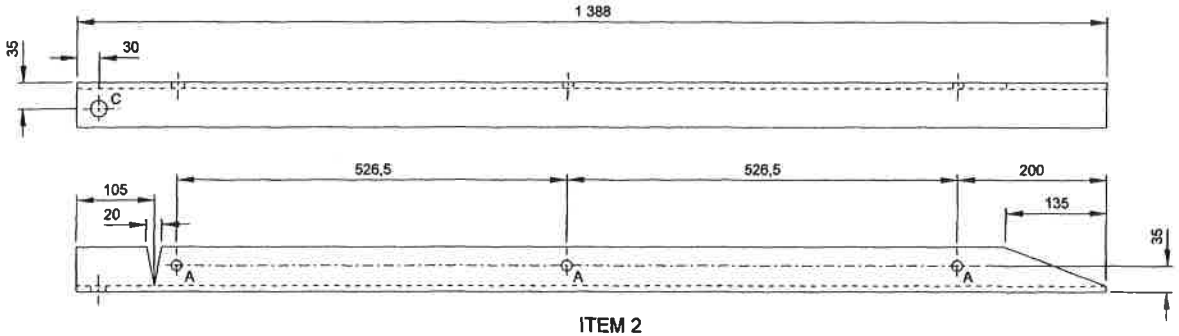

ITEM 2

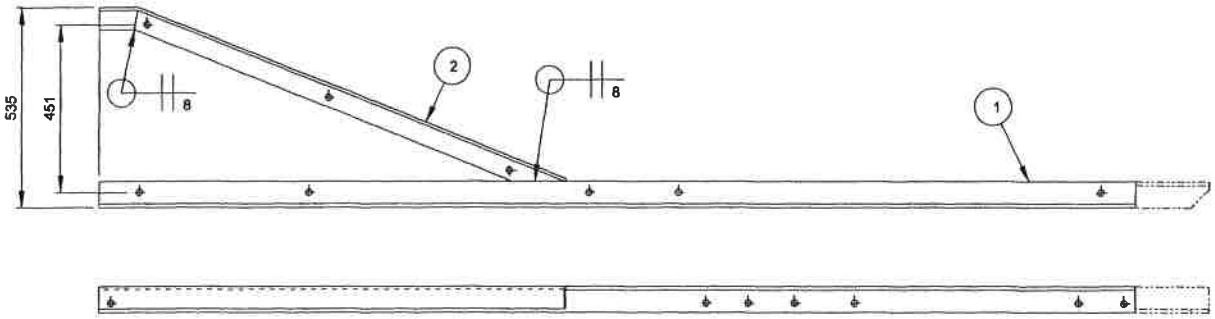

ASSEMBLY

SCALE: 1:10

LEGEND

A = ø14
B = ø18
C = ø22
} HOLES

FINISH
ZINC COAT TO SANS 121 FOR CONDITIONS IN SITU AFTER WELDING.

NOTES
1. ADD 200mm TO THIS DIMENSION WHEN REQUIRED FOR EASE OF ERECTING CAGE.
2. FOR MASTER RECORD INDEX SEE DOCUMENT NO. BBB1317.

AMENDMENTS		
NO	NAME	DATE
1	JP du Plessis	95 - 05 - 24
REVISED AND REDRAWN, NOTE ADDED. DO REF: T95 / 028		
2		
REVISED AND REDRAWN. DO REF: CDO/1772		

DO REF: T88 / 042	GEN TOL: LIN ±	1	ANG ± 1°
DRN: J V T	CKD: J SWIEGERS	DATE: 89 - 05 - 15	
ENG: -	C E D MYHILL	for CHIEF ENG	
CENTRAL DRAWING OFFICE	SPOORNET		

CAGE MEMBER LH

SIGNAL CAGE

DIMENSIONS: mm
SCALE: 1:5

A2

DRAWING NO CEE-TMFD - 1

SHEET 4 OF 15

ITEM	DESCRIPTION/BESKRYWING	QTY HVLD	STORES ITEM MAGASYNITEM-NO	DRG TEK NO CEE-
1	STEEL, ANGLE STAAL, HOEK 30x30x5 THK DIK x'P'L 11/14444	2		
2	STEEL, ANGLE STAAL, HOEK 30x30x5 THK DIK x923L 11/14444	2		
3	STEEL, FLAT STAAL, PLAT 40x6 THK DIK x60 L 11/12255	3		
4	STEEL, ANGLE STAAL, HOEK 45x45x6 THK DIK x40L 11/14468	3		
5	EXPANDED METAL PLAATGAAS 1200x900x3 THK DIK	1		
6	EXPANDED METAL PLAATGAAS 1800x900x3 THK DIK	1		

AMENDMENTS WYSIGINGS		
NO	NAME NAAM	DATE DATUM

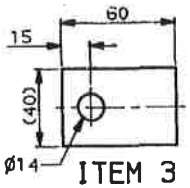

ITEM 3

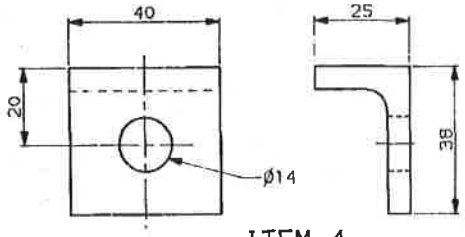

ITEM 4

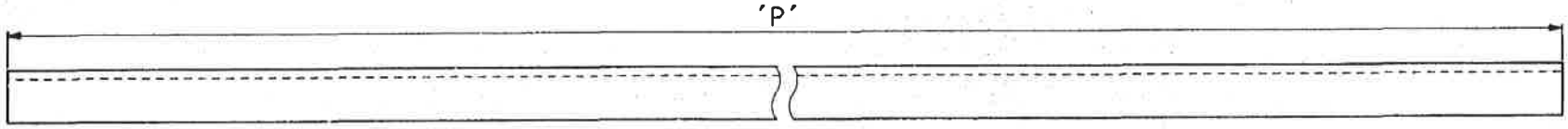

ITEM 1

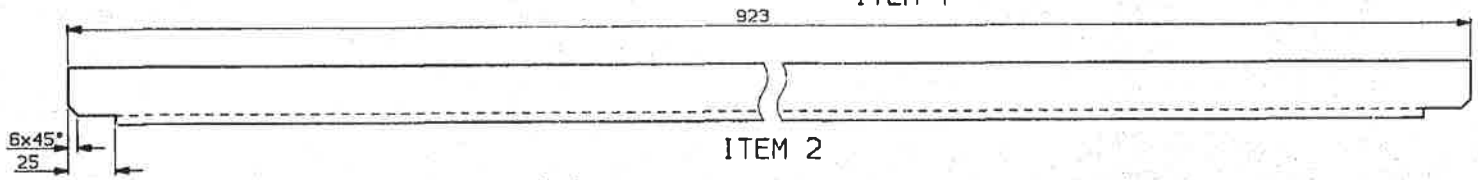

ITEM 2

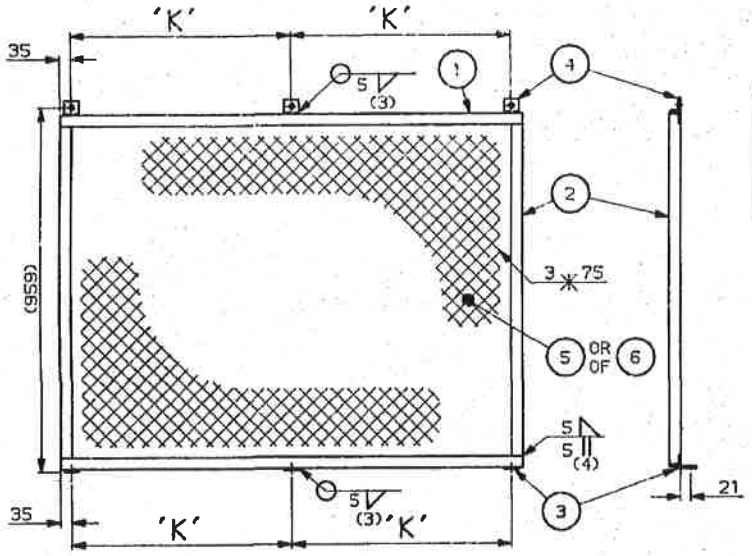

ASSEMBLY/SAMESTEL

CAGE WIDTH HOKWYDTE (NOM)	DIMENSION AFMETING 'P'	DIMENSION AFMETING 'K'
1200	1230	580
1800	1830	880

FINISH/AFWERKING

ZINC COAT TO SPEC
SINKBEDEK VOLGENS SPES SABS 763

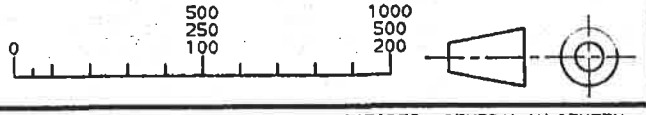

DIMENSIONS, MILLIMETRES
AFMETINGS, MILLIMETER

DRN GET J.VAN TONDER	GEN TOLERANCES, LIN± 1 ALG TOLERANSIES, ANG/HOEK± 1°		
TRCD NGT CAD/JVT	DO REF TK-VERW T88/42	ENG IR	
CKD NGS J.SWIEGERS	DATE DATUM 89-05-15	C.E.B. MyLill for ns.	
CHIEF ELECTRICAL ENGINEER ELEKTRIESE HOOFINGENIEUR	JOHANNESBURG		
SOUTH AFRICAN TRANSPORT SERVICES SUID-AFRIKAANSE VERVOERDIENSTE			

ELECTRIFICATION TYPES / ELEKTRIFIKASIETIPES, GENERAL/ALGEMEEN

SCREEN
SIGNAL CAGE
SKERM
SINJAALHOK

CEE-TMFD-1 SHT VEL 1

ASSY DRG
SAMEST-TEK

ELECTRIFICATION TYPES
REFERENCE DRG NO
CEE-MA-26 SH 78
ELEKTRIFIKASIETIPES
VERWYSINGSTEK-NO
CEE-MA-369 VEL 78

STORES ITEM MAGASYNITEM NO

DRAWING TEKENING NO CEE-TMFD-1

SHEET VEL 5 OF VAN 15

A2

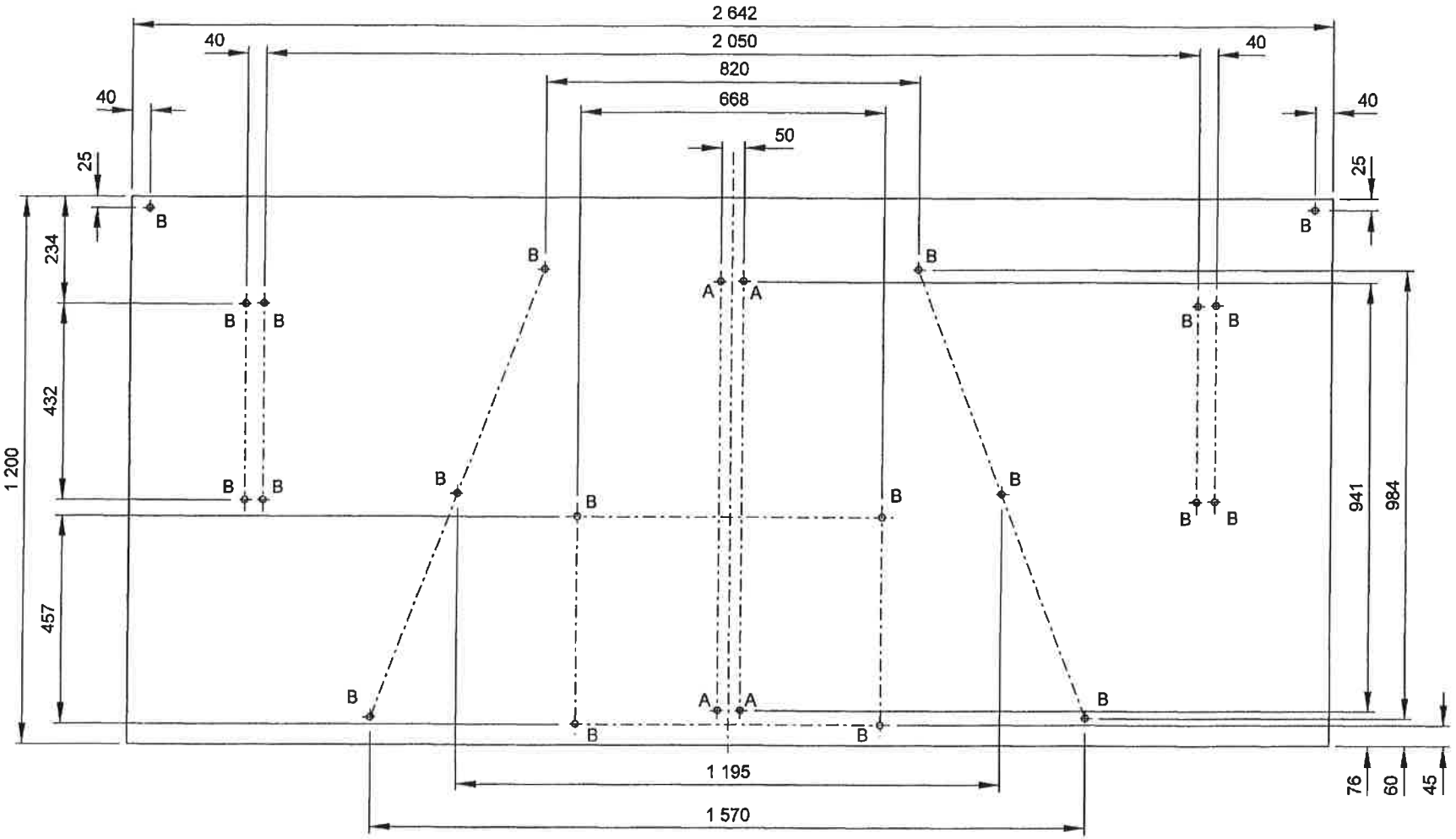

FINISH
ZINC COAT TO SANS 121 FOR CONDITIONS IN SITU.

NOTE
FOR MASTER RECORD INDEX SEE DOCUMENT NO. BBB1317.

LEGEND

A = ø12 HOLES
B = ø14 HOLES

AMENDMENTS		
NO	NAME	DATE
1	JP du Plessis	95-05-24
REVISED AND REDRAWN. DIMENSIONS 2 642 AND 2 050 WERE 2 242 AND 1 650. DO REF: T95/028		
2	4/6/2000	
REVISED AND REDRAWN. DO REF: CDO/1772		

MATERIAL: ITEM NO ~~(11/11072)~~, STEEL, SHEET, 3 THK		
DO REF: T88/042	GEN TOL: LIN± 1	ANG± -
DRN: J V T	CKD: J SWIEGERS	DATE: 89-05-15
ENG: ———	C E D MYHILL	for CHIEF ENG
CENTRAL DRAWING OFFICE SPOORNET		

SIDE SHIELD

SIGNAL CAGE

DIMENSION: mm
SCALE: 1:10

A3

DRAWING NO **CEE-TMFD - 1**

SHEET **6** OF **15**

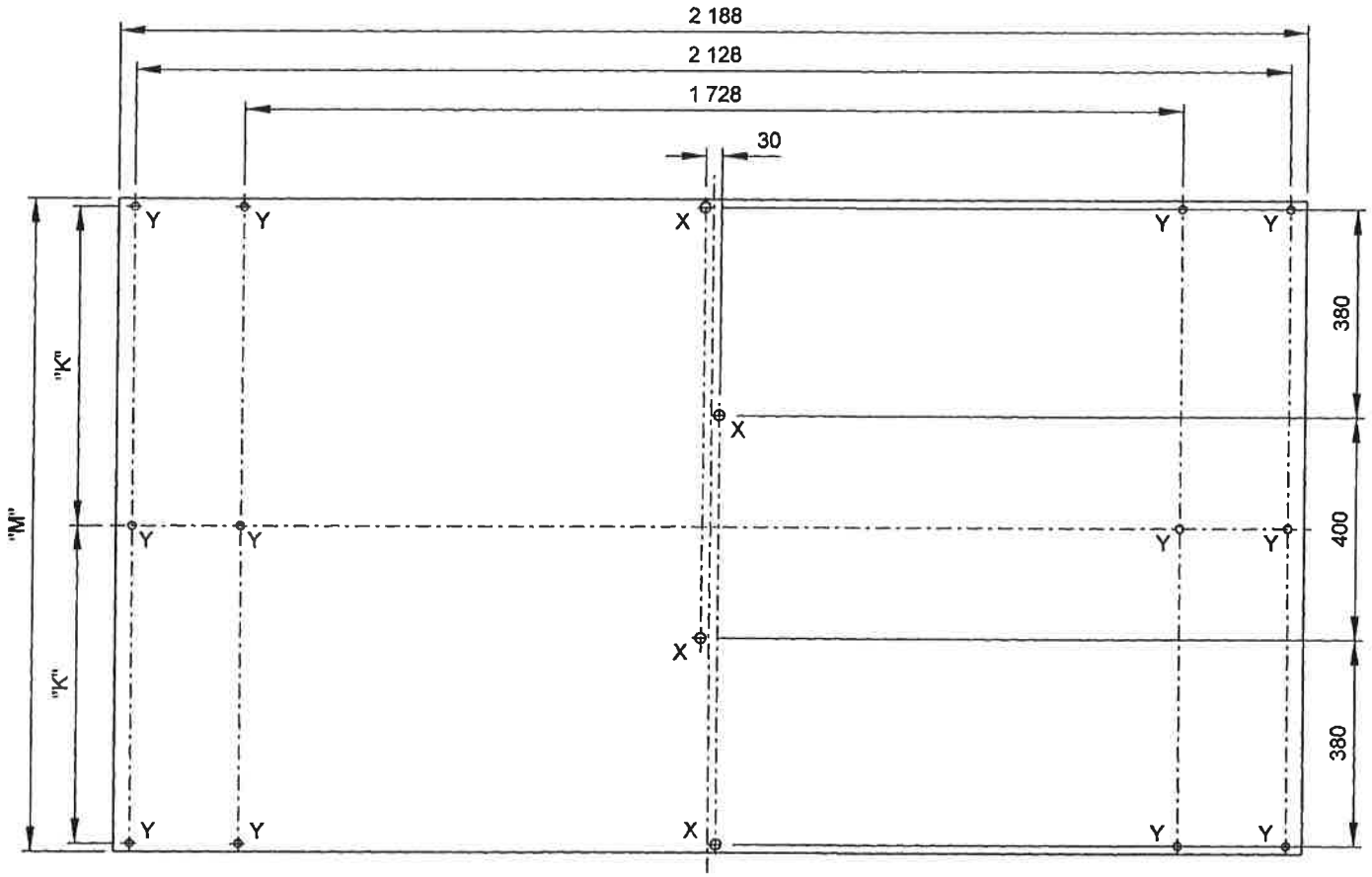

LEGEND

X = ø18 HOLES
Y = ø14 HOLES

CAGE WIDTH (NOM)	DIMENSION 'M'	DIMENSION 'K'
1 200	1 200	580
1 800	1 800	880

NOTES
1. HOLES MARKED ON SMOOTH SIDE OF PLATE.
2. FOR MASTER RECORD INDEX SEE DOCUMENT NO. BBB1317.

FINISH
ZINC COAT TO SANS 121 FOR CONDITIONS IN SITU.

AMENDMENTS		
NO	NAME	DATE
1	JP du Plessis	95-05-24

REVISED AND REDRAWN.
DIMENSIONS 2 188 AND
2 128 WERE 1 788 AND
1 728.
DO REF: T95/028

2	4/8/2003	

REVISED AND REDRAWN.
DO REF: CDO/1772

MATERIAL: ITEM NO ~~(11/———)~~, STEEL, CHEQUER PLATE, 6 THK		
DO REF: T88/042	GEN TOL: LIN± 1	ANG± -
DRN: J V T	CKD: J SWIEGERS	DATE: 89-05-15
ENG: ————	C E D MYHILL	for CHIEF ENG
CENTRAL DRAWING OFFICE SPOORNET		

CAGE FLOOR PLATE

SIGNAL CAGE

DIMENSION: mm
SCALE: 1:10

A3

DRAWING NO CEE-TMFD - 1

SHEET 7 OF 15

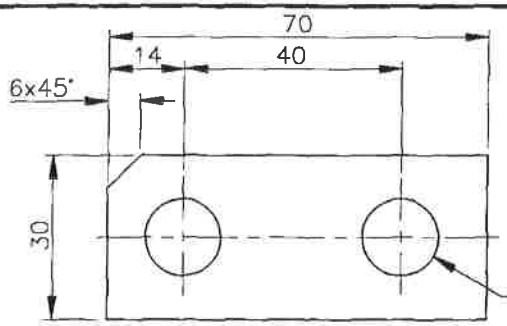

ITEM 2

ITEM	DESCRIPTION/BESKRYWING	QTY HVLD	STORES ITEM MAGASYNITEM– NO	DRG TEK NO CEE–	AMENDMENTS WYSIGINGS NO	NAME NAAM	DATE DATUM
1	STEEL,ANGLE STAAL,HOEK 45x45x6 THK DIK x 'J' 11/14468	1					
2	STEEL,FLAT STAAL,PLAT 30x6 THK DIK x 70 L 11/12243	2					

CAGE WIDTH HOKWYDTE (NOM)	DIMENSION AFMETING 'J'	DIMENSION AFMETING 'K'
1200	1244	580
1800	1844	880

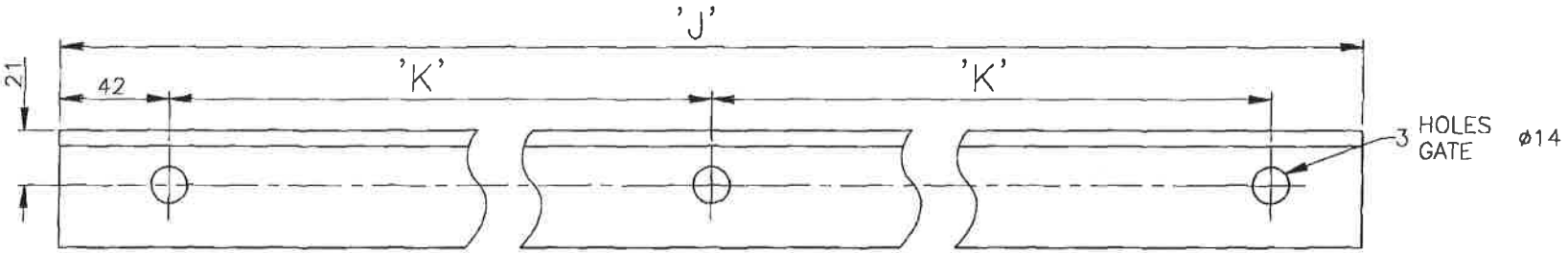

ITEM 1

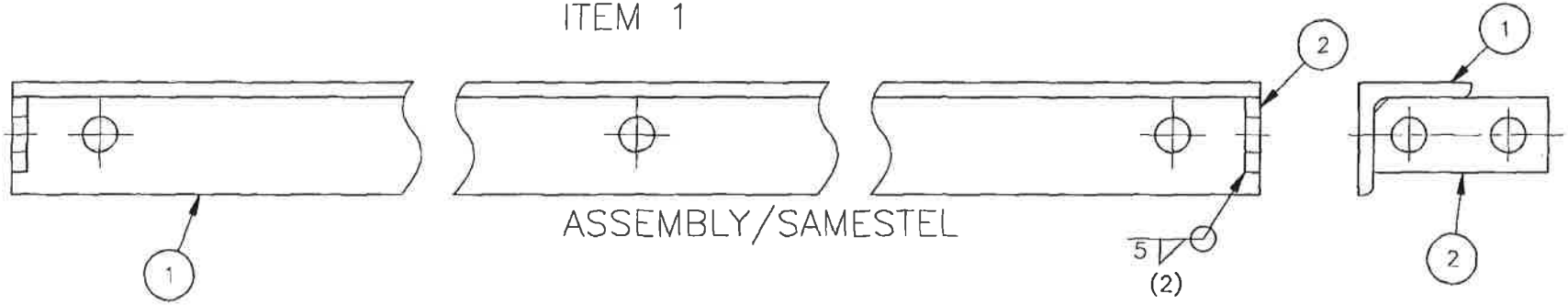

ASSEMBLY/SAMESTEL

FINISH/AFWERKING

ZINC COAT TO SINKBEDEK VOLG. SABS 763

DIMENSIONS:MILLIMETRES
AFMETINGS :MILLIMETER

DRN GET J.VAN TONDER	GEN TOLERANCES:LIN± 1 ALG TOLERANSIES:ANG/HOEK± ——		
TRCD NGT CAD/JVT	DO REF TK-VERW T88/42	ENG IR ——	
CKD NGS J.SWIEGERS	DATE DATUM 89-05-15	C.E.D.MYHILL for ns.	
CHIEF ELECTRICAL ENGINEER ELEKTRIESE HOOFINGENIEUR		JOHANNESBURG	
SOUTH AFRICAN TRANSPORT SERVICES SUID-AFRIKAANSE VERVOERDIENSTE			

ELECTRIFICATION TYPES / ELEKTRIFIKASIETIPES: GENERAL/ALGEMEEN

HANDRAIL
SIGNAL CAGE
HANDRELING
SINJAALHOK

CEE-TMFD-1 SHT VEL 1

ASSY DRG SAMEST-TEK

ELECTRIFICATION TYPES REFERENCE DRG NO CEE-MA-26 SH 7B
ELEKTRIFIKASIETIPES VERWYSINGSTEK-NO CEE-MA-369 VEL 7B

STORES ITEM MAGASYNITEM NO

DRAWING TEKENING NO CEE-TMFD-1

SHEET VEL 8 OF VAN 15

A3

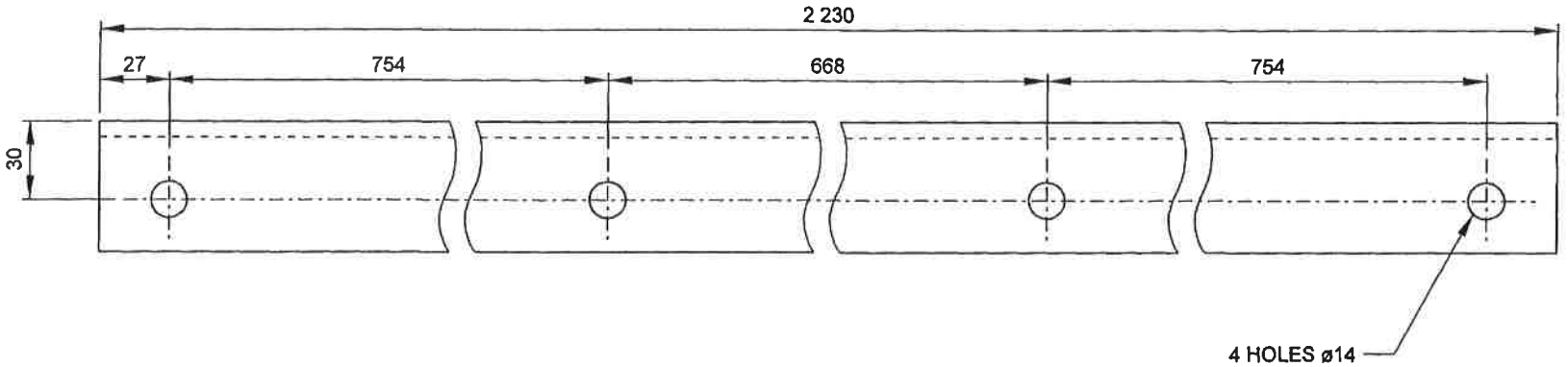

FINISH
ZINC COAT TO SANS 121 FOR CONDITIONS IN SITU.

NOTE
FOR MASTER RECORD INDEX SEE DOCUMENT NO. BBB1317.

AMENDMENTS		
NO	NAME	DATE
1	JP du Plessis	95-05-24
REVISED AND REDRAWN. DIMENSIONS 2 230 AND 754 WERE 1 830 AND 554. DO REF: T95/028		
2	4/8/2003	
REVISED AND REDRAWN. DO REF: CDO/1772		

MATERIAL: ITEM NO ~~(11/14481)~~ , STEEL, ANGLE, 50 X 50 X 6		
DO REF: T88/042	GEN TOL: LIN± 0,5	ANG± -
DRN: J V T	CKD: J SWIEGERS	DATE: 89-05-15
ENG: ————	C E D MYHILL	for CHIEF ENG
INFRASTRUCTURE SPOORNET		

STIFFENER

SIGNAL CAGE

DIMENSION: mm
SCALE: 1:2

A3

DRAWING NO CEE-TMFD-1

SHEET 9 OF 15

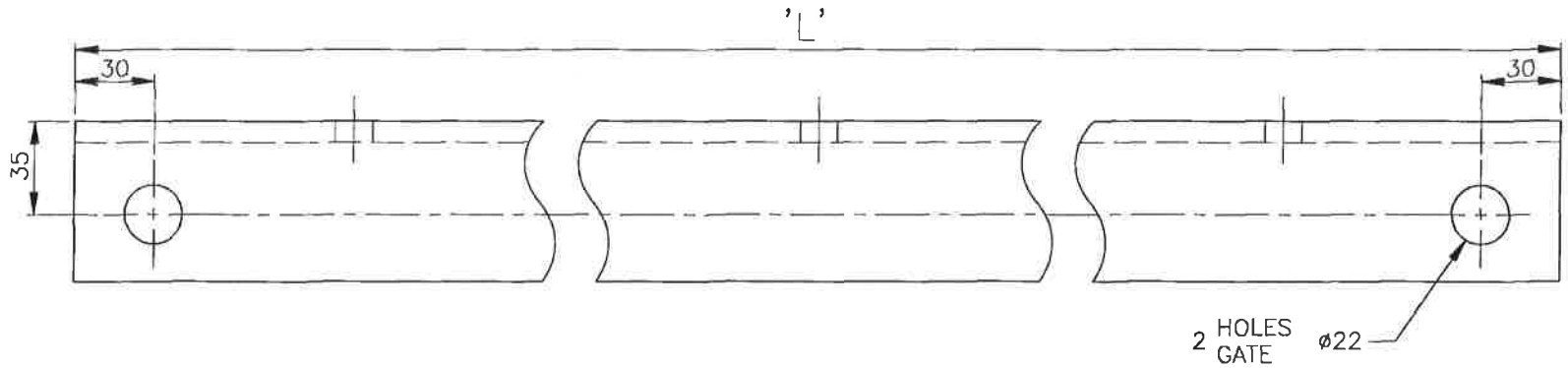

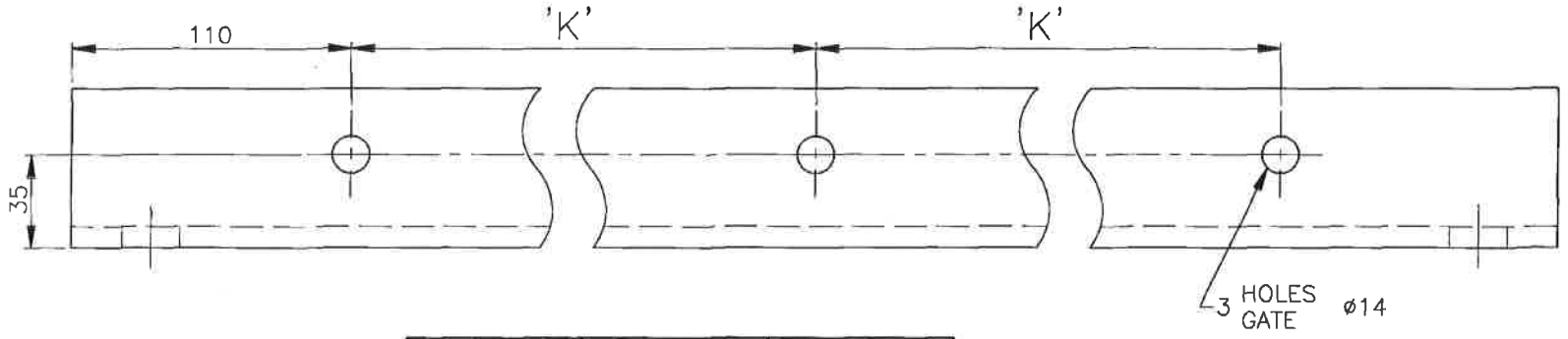

CAGE WIDTH HOKWYDTE (NOM)	DIMENSION AFMETING 'L'	DIMENSION AFMETING 'K'
1200	1380	580
1800	1980	880

FINISH/AFWERKING

ZINC COAT TO SINKBEDEK VOLG. SABS 763

DIMENSIONS:MILLIMETRES
AFMETINGS :MILLIMETER

MATERIAL/MATERIAAL

STEEL,ANGLE STAAL,HOEK 60x60x8 THK DIK

STORES ITEM MAGASYNITEM– NO 11/14493

SPEC SPES CME 9 SYM SIM 8

DRN GET J.VAN TONDER

GEN TOLERANCES:LIN± 1
ALG TOLERANSIES:ANG/HOEK± ——

TRCD NGT CAD/JVT

DO REF TK–VERW T88/42

ENG IR ——

CKD NGS J.SWIEGERS

DATE DATUM 89–05–15

C.E.D.MYHILL for ns.

CHIEF ELECTRICAL ENGINEER
ELEKTRIESE HOOFINGENIEUR

JOHANNESBURG

SOUTH AFRICAN TRANSPORT SERVICES
SUID–AFRIKAANSE VERVOERDIENSTE

ELECTRIFICATION TYPES / ELEKTRIFIKASIETIPES: GENERAL/ALGEMEEN

SUPPORT,OUTER,FLOOR

SIGNAL CAGE

STEUN,BUITE–,VLOER

SINJAALHOK

AMENDMENTS
WYSIGINGS

NO	NAME NAAM	DATE DATUM

CEE–TMFD–1 SHT VEL 1

ASSY DRG
SAMEST–TEK

ELECTRIFICATION TYPES
REFERENCE DRG NO
CEE–MA–26 SH 7B
ELEKTRIFIKASIETIPES
VERWYSINGSTEK–NO
CEE–MA–369 VEL 7B

STORES ITEM MAGASYNITEM NO

DRAWING TEKENING NO CEE–TMFD–1

SHEET VEL 10 OF VAN 15

A3

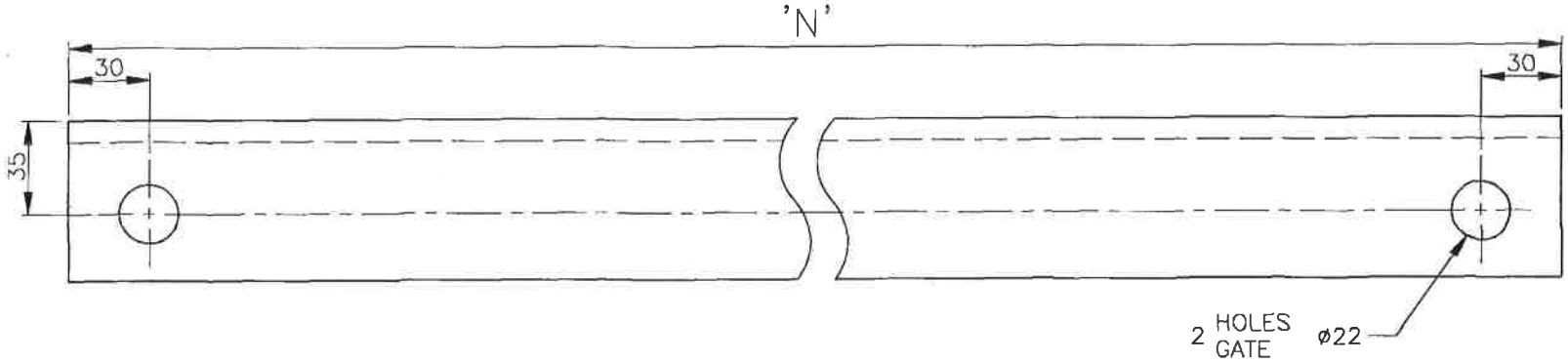

CAGE WIDTH HOKWYDTE (NOM)	DIMENSION AFMETING 'N'
1200	1400
1800	2000

FINISH/AFWERKING

ZINC COAT TO SINKBEDEK VOLG. SABS 763

DIMENSIONS:MILLIMETRES
AFMETINGS :MILLIMETER

MATERIAL/MATERIAAL

STEEL,ANGLE / STAAL,HOEK 60x60x8 THK / DIK

STORES ITEM / MAGASYNITEM– NO 11/14493

SPEC / SPES CME 9 SYM / SIM 8

DRN / GET J.VAN TONDER	GEN TOLERANCES:LIN± 1 / ALG TOLERANSIES:ANG/HOEK± ——	
TRCD / NGT CAD/JVT	DO REF / TK–VERW T88/42	ENG / IR ——
CKD / NGS J.SWIEGERS	DATE / DATUM 89–05–15	for C.E.D.MYHILL ns.
CHIEF ELECTRICAL ENGINEER / ELEKTRIESE HOOFINGENIEUR		JOHANNESBURG
SOUTH AFRICAN TRANSPORT SERVICES / SUID–AFRIKAANSE VERVOERDIENSTE		

ELECTRIFICATION TYPES / ELEKTRIFIKASIETIPES: GENERAL/ALGEMEEN

SUPPORT,INNER,FLOOR
SIGNAL CAGE

STEUN,BINNE–,VLOER
SINJAALHOK

AMENDMENTS
WYSIGINGS

NO	NAME NAAM	DATE DATUM

CEE–TMFD–1 SHT / VEL 1

ASSY DRG
SAMEST–TEK

ELECTRIFICATION TYPES
REFERENCE DRG NO
CEE–MA–26 SH 7B
ELEKTRIFIKASIETIPES
VERWYSINGSTEK–NO
CEE–MA–369 VEL 7B

STORES ITEM / MAGASYNITEM NO

DRAWING / TEKENING NO CEE–TMFD–1

SHEET / VEL 11 OF / VAN 15

A3

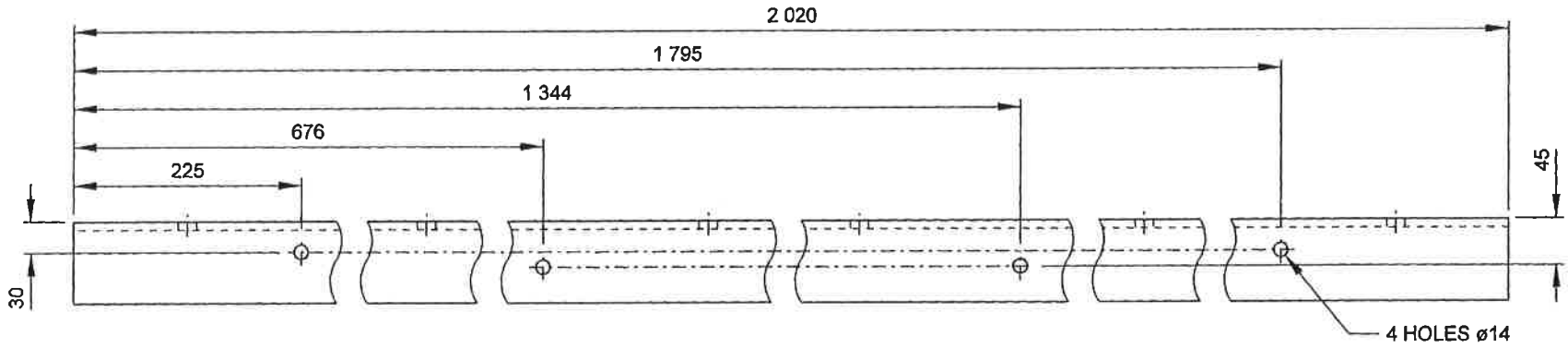

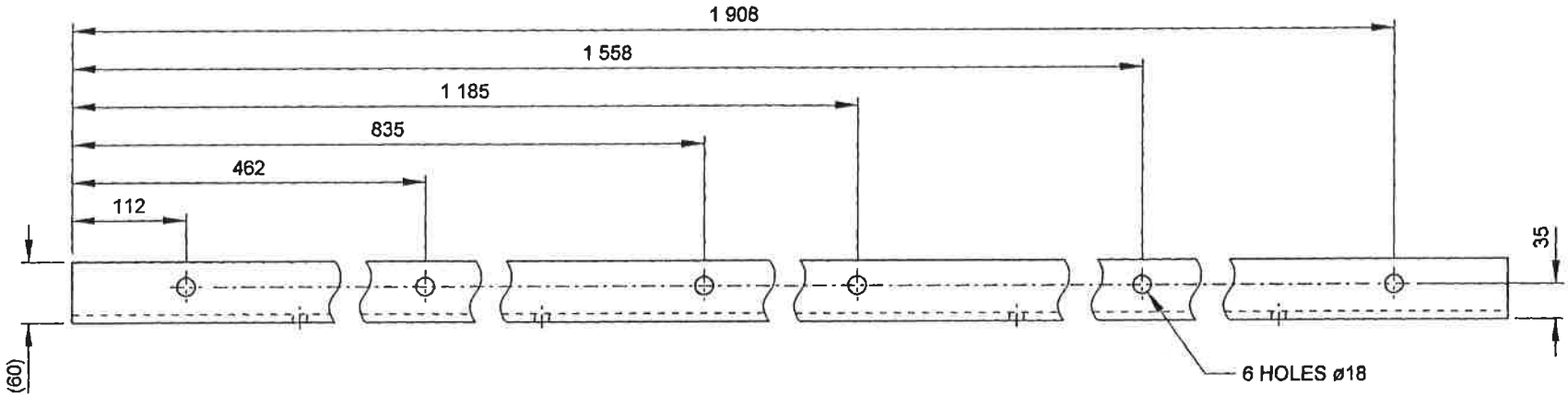

FINISH
ZINC COAT TO SANS 121 FOR CONDITIONS IN SITU.

NOTE
FOR MASTER RECORD INDEX SEE DOCUMENT NO. BBB1317.

AMENDMENTS		
NO	NAME	DATE
1	JP du Plessis	95-05-24
REVISED AND REDRAWN. HOLES POSITIONS CHANGED. DO REF: T95/028		
2	4/8/2000	
REVISED AND REDRAWN. DO REF: CDO/1772		

MATERIAL: ITEM NO ~~(11/14609)~~, STEEL, ANGLE, 80 X 60 X 8		
DO REF: T88/042	GEN TOL: LIN± 1	ANG± -
DRN: J V T	CKD: J SWIEGERS	DATE: 89-05-15
ENG: ————	C E D MYHILL	for CHIEF ENG
CENTRAL DRAWING OFFICE SPOORNET		

BRACKET, MOUNTING OF EQUIPMENT

SIGNAL CAGE

DIMENSION: mm
SCALE: 1:5

A3

DRAWING NO **CEE-TMFD - 1**

SHEET **12** OF **15**

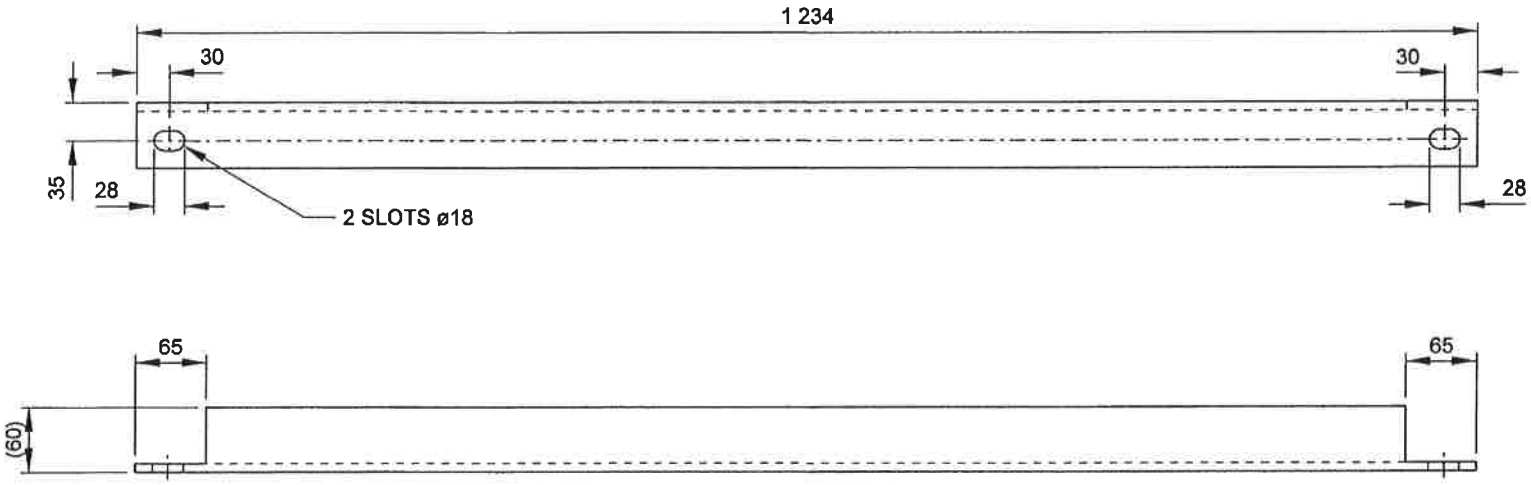

FINISH
ZINC COAT TO SANS 121 FOR CONDITIONS IN SITU.

NOTE
FOR MASTER RECORD INDEX SEE DOCUMENT NO. BBB1317.

AMENDMENTS		
NO	NAME	DATE
1	JP du Plessis	95-05-24
REVISED, 2 HOLES OMITTED, MATERIAL WAS 80 x 60. DO REF: T95/028		
2	4/6/2003	
REVISED AND REDRAWN. DO REF: CDO/1772		

MATERIAL: ITEM NO ~~(11/14493)~~ , STEEL, ANGLE, 60 x 60 x 8		
DO REF: T88/042	GEN TOL: LIN± 1 ANG± -	
DRN: J V T	CKD: J SWIEGERS	DATE: 89-05-15
ENG: ———	C E D MYHILL	for CHIEF ENG
CENTRAL DRAWING OFFICE SPOORNET		

BRACKET, MOVEABLE, EQUIPMENT

SIGNAL CAGE

DIMENSION: mm
SCALE: 1:5

A3

DRAWING NO **CEE-TMFD-1**

SHEET **13** OF **15**

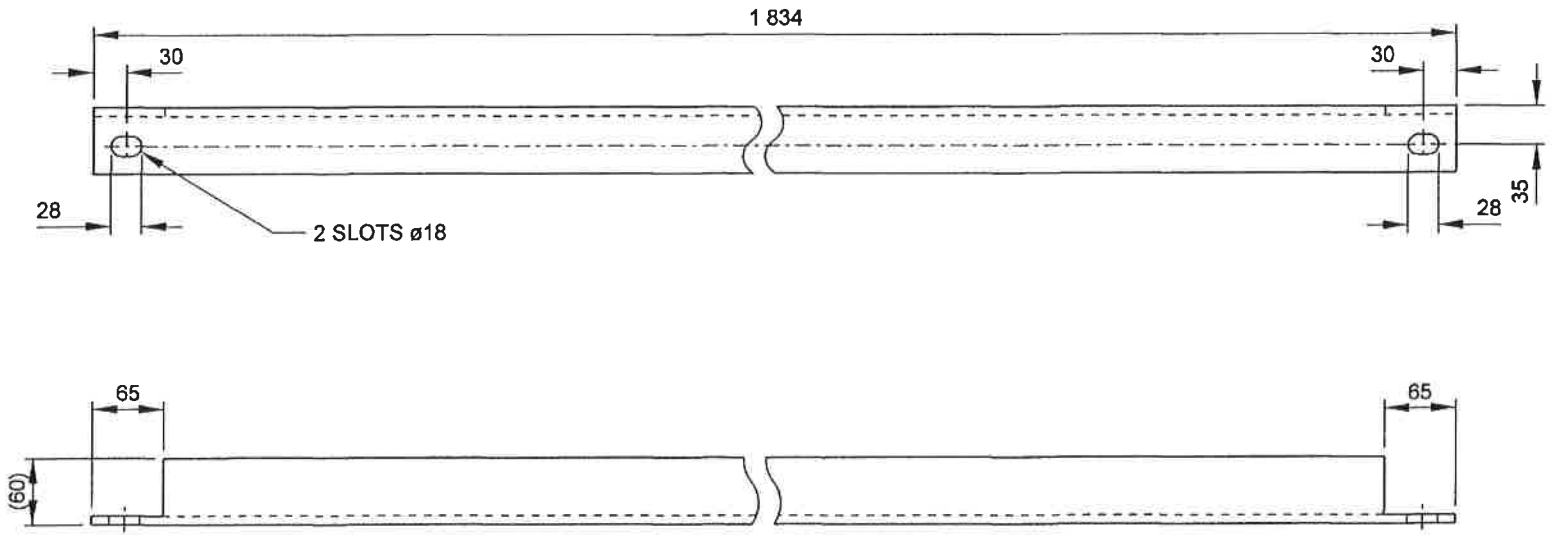

FINISH
ZINC COAT TO SANS 121 FOR CONDITIONS IN SITU.

NOTE
FOR MASTER RECORD INDEX SEE DOCUMENT NO. BBB1317.

AMENDMENTS		
NO	NAME	DATE
1	JP du Plessis	95-05-24
REVISED, 5 HOLES OMITTED, MATERIAL WAS 80 x 60. DO REF: T95/028		
2	4/8/2005	
REVISED AND REDRAWN. DO REF: CDO/1772		

MATERIAL: ITEM NO ~~(11/14493)~~ , STEEL, ANGLE, 60 x 60 x 8			
DO REF: T88/042	GEN TOL: LIN± 1	ANG± -	
DRN: J V T	CKD: J SWIEGERS	DATE: 89-05-15	
ENG: ———	C E D MYHILL	for CHIEF ENG	
CENTRAL DRAWING OFFICE SPOORNET			

BRACKET, MOVEABLE, EQUIPMENT

SIGNAL CAGE

DIMENSION: mm
SCALE: 1:5

A3

DRAWING NO **CEE-TMFD - 1**

SHEET **14** OF **15**

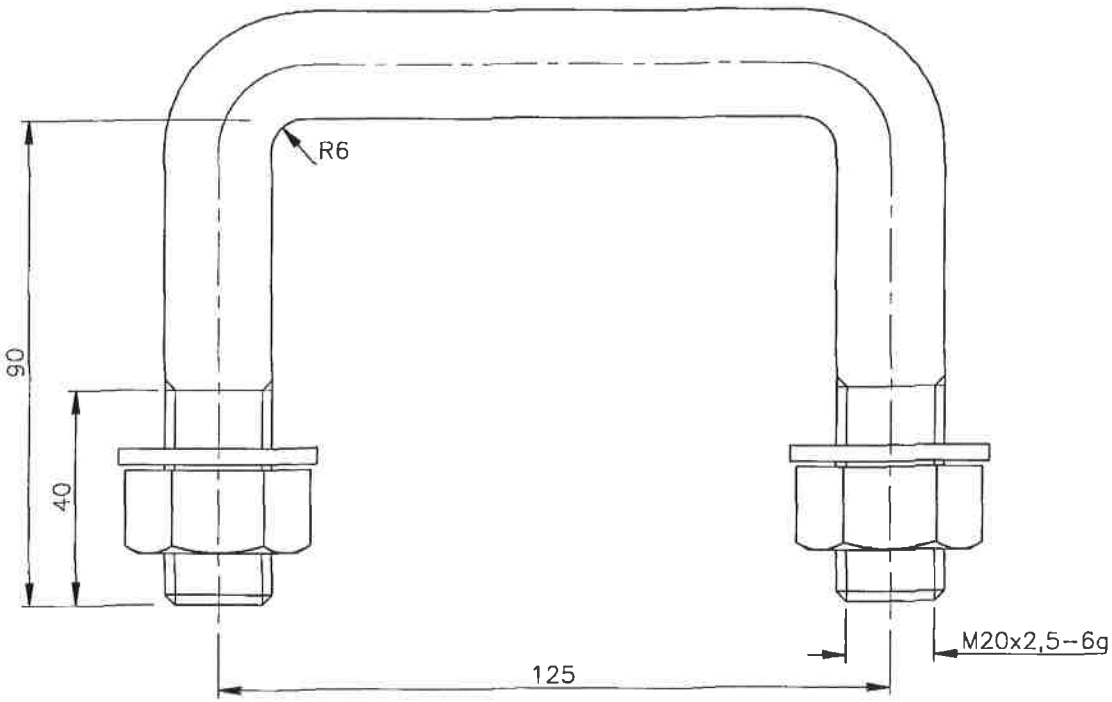

AMENDMENTS WYSIGINGS		
NO	NAME NAAM	DATE DATUM

DIMENSIONS:MILLIMETRES
AFMETINGS :MILLIMETER

FINISH/AFWERKING

ZINC COAT TO SINKBEDEK VOLG. SABS 763

0 50 100

MATERIAL/MATERIAAL	
STEEL,ROUND STAAL,ROND	20x305L
STORES ITEM MAGASYNITEM–	NO 11/———
SPEC SPES	CME 9 SYM SIM 7

DRN GET J.VAN TONDER	GEN TOLERANCES:LIN± 0,5 ALG TOLERANSIES:ANG/HOEK± ———	
TRCD NGT CAD/JVT	DO REF TK–VERW T88/42	ENG IR ———
CKD NGS J.SWIEGERS	DATE DATUM 89–05–15	for C.E.D.MYHILL ns.
CHIEF ELECTRICAL ENGINEER ELEKTRIESE HOOFINGENIEUR		JOHANNESBURG
SOUTH AFRICAN TRANSPORT SERVICES SUID–AFRIKAANSE VERVOERDIENSTE		

ELECTRIFICATION TYPES / ELEKTRIFIKASIETIPES: GENERAL/ALGEMEEN

U–BOLT,M20: WITH NUTS & WASHERS
SIGNAL CAGE
U–BOUT,M20: MET MOERE & WASTERS
SINJAALHOK

CEE–TMFD–1 SHT VEL 1

ASSY DRG SAMEST–TEK

ELECTRIFICATION TYPES REFERENCE DRG NO
CEE–MA–26 SH 7B
ELEKTRIFIKASIETIPES VERWYSINGSTEK–NO
CEE–MA–369 VEL 7B

STORES ITEM MAGASYNITEM NO

DRAWING TEKENING NO CEE–TMFD–1

SHEET VEL 15 OF VAN 15

A3

CAMBER BASED ON 100mm CAMBER FOR STANDARD 26m SIX TRACK STRUCTURE. KROMMING GEBASEER OP 100mm KROMMING VIR STANDAARD 26m SESSPOORSTRUKTUUR.

℄ TO MAST ℄ ℄ TOT MAS ℄	CAMBER KROMING
33,528m	166,7mm
32,000m	152,4mm
30,480m	138,0mm
28,956m	125,4mm

ITEM.	DESCRIPTION-BESKRYWING	QTY. HVLD.	STORES MAGASYN NO.	DRAWING TEKENING NO. CEE - 5m CONTACT WIRE HEIGHT	6m RYDRAAD-HOOGTE
1.	RAIL MAST. SPOORMAS	2	———	TMD-22	TMD-24
2.	KNEE BRACE ASSEMBLY. KNIESPANSTUKSAMESTEL.	*	———	TMF-409	TMF-409
3.	KNEE BRACE ASSEMBLY. KNIESPANSTUKSAMESTEL. (CENTRE MAST TYPE MIDDELMAS-TIPE)	*	———	TMF-404	TMF-404
4.	PLATE, BATTEN. PLAAT, STROOK.	*	———	TMHF-115	TMHF-115
5	CHANNEL KANAAL	*	———	TMHC-84 (ITEM)	TMHC-84 (ITEM)
6.	ANGLE MAST. HOEKMAS.	2.	———	TMB-32	TMB-81

NOTES/OPMERKINGS

1. ALL STRUCTURAL ANGLE / ALLE STRUKTUURHOEKE 60×60×8 THK. / DIK. STORES MAGASYN NO.(M)11/14483
2. ALL HOLES / ALLE GATE ϕ22.
3. ALL STRUCTURAL CHANNELS / ALLE STRUKTUURKANALE 100×50 STORES MAGASYN NO.(M) 11/14683

*. AS REQUIRED. SOOS BENODIG

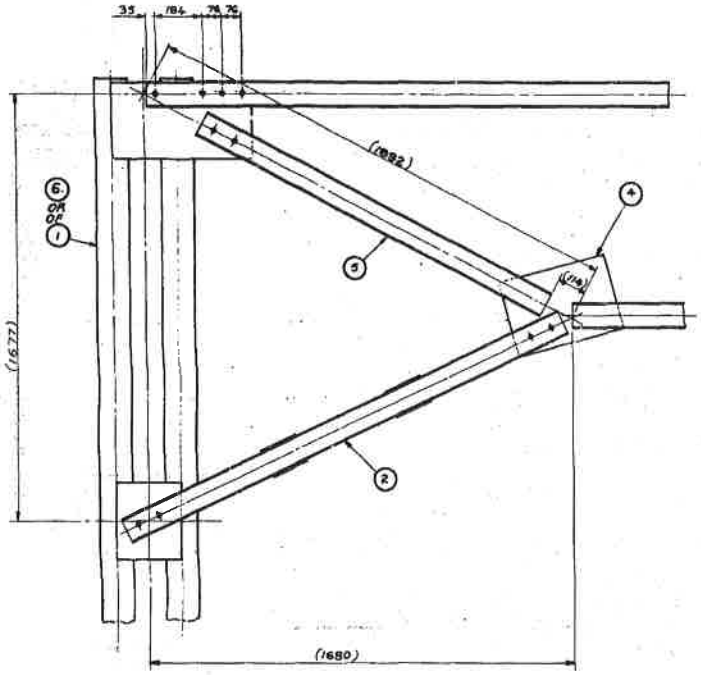

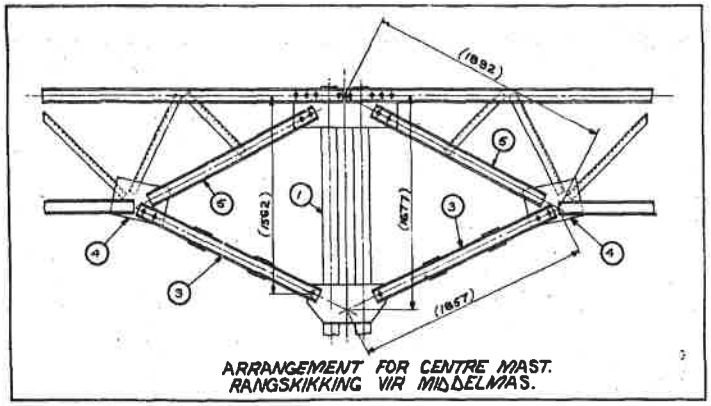

ARRANGEMENT FOR CENTRE MAST.
RANGSKIKKING VIR MIDDELMAS.

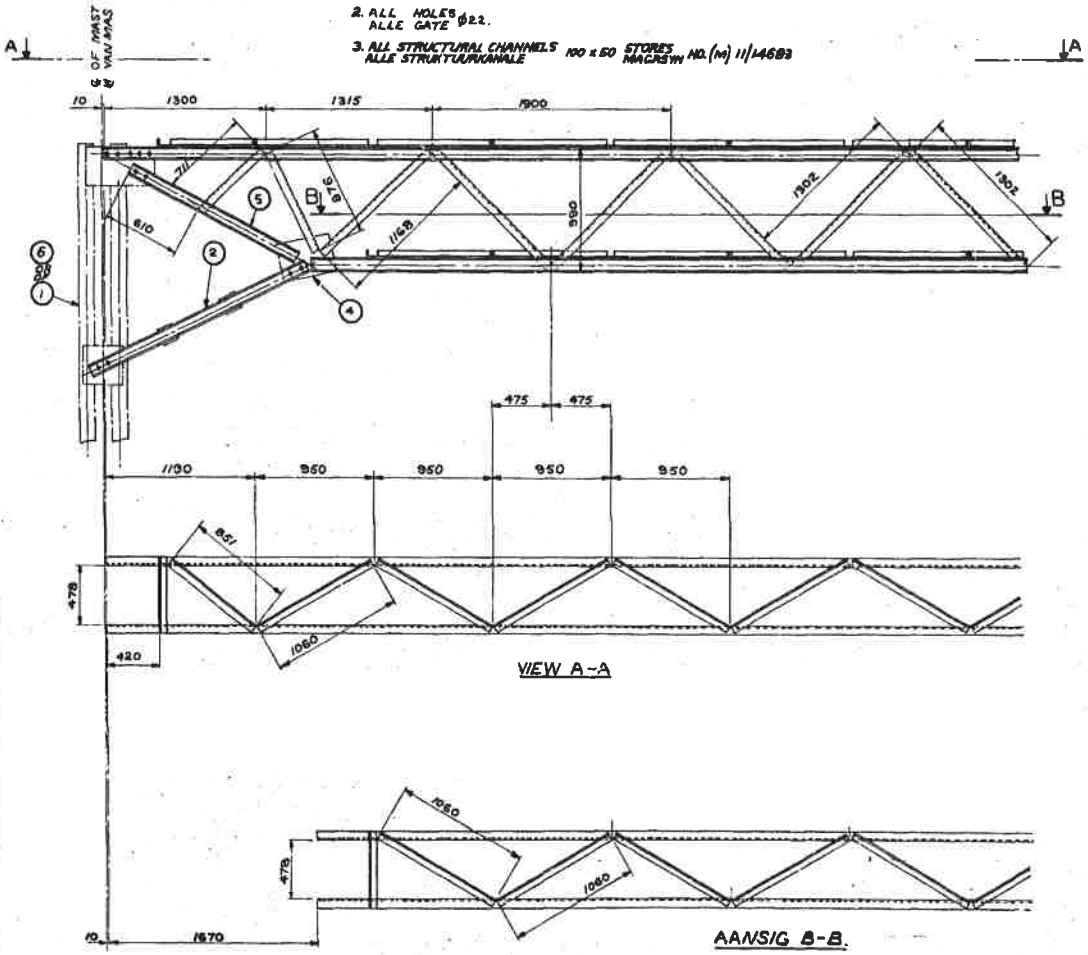

AMENDMENTS / WYSIGINGS

NO	NAME NAAM	DATE DATUM
1.	T. Hansen	82-02-03.

REDRAWN AND METRICATED. TITLE CHANGED. DRG. NO. WAS CEE-IE-41 SHT. 3. OORGETEKEN EN GEMETRISEER. TITEL VERANDER. TEK. NO. WAS CEE-IE-41 VEL 3. D.O. REF. T.K. VERW. T1/81/9

2.	T. Hansen	82-07-28.

ITEM 6 AND ASSY. DRG. NO. CEE-TMG-132 ADDED. ITEM 6 EN SAMEST. TEK NO. CEE-TMG-132 BYGEVOEG. D.O. REF. T.K. VERW. T1/82/60

3.	L.E. WOOD.	90-07-06

DRG. UPDATED. TEK. BYGEWERK. D.O. REF. T.K.-VERW. T90/27

DIMENSIONS: MILLIMETRES, METRES.
AFMETINGS: MILLIMETER, METER.

SOUTH AFRICAN TRANSPORT SERVICES.
SUID-AFRIKAANSE VERVOERDIENSTE.

DRN. GET. K.W.C.	GEN. TOLERANCES: LIN ±1,5 ALG. TOLERANSES: ANG/HOEK 0°30'	
TRCD NGT. M. VAN HEULEN	D.O. REF. T.K.-VERW. ———	ENG. IR. ———
CKD. NGS. ———	DATE DATUM 45-9-24	———
CHIEF ELECTRICAL ENGINEER ELEKTRIESE HOOFINGENIEUR	JOHANNESBURG	

0 500 1000 1000 2000

BOOM DETAILS:
LATTICE BRIDGE RAIL AND ANGLE MAST MAX. SPAN 28m

BALKDETAILS:
TRALIEBRUG SPOOR EN HOEKMAS MAKS. SPAN 28m

CEE-TMG-132
CEE-TMG-131
ASSY. DRG./SAMEST-TEK
MODULUS ITEM NO.

DRAWING TEKENING NO. CEE-TMD-27

A1

ITEM	DESCRIPTION	QTY	STORES ITEM No	DRG No. CEE-
1	CAGE, SIGNAL	*		TMFD-1 SHT 1
2	LADDER, CAGE	*		TMFD-2 SHT 1
3	CATWALK	1		TMFD-3 SHT 1
4	LADDER, MAST	1		TMFB-2 SHT 1
5	ANTI-CLIMBING DEVICE	1		TMFB-3
6	LADDER, EXTENSION PIECE	1		TMFB-11

* AS REQUIRED

AMENDMENTS		
NO	NAME	DATE
1	JP du Plessis	95-09-24
REVISED AND REDRAWN DO REF: TM0428		
2		
REVISED AND REDRAWN DO REF: CDO/1772		

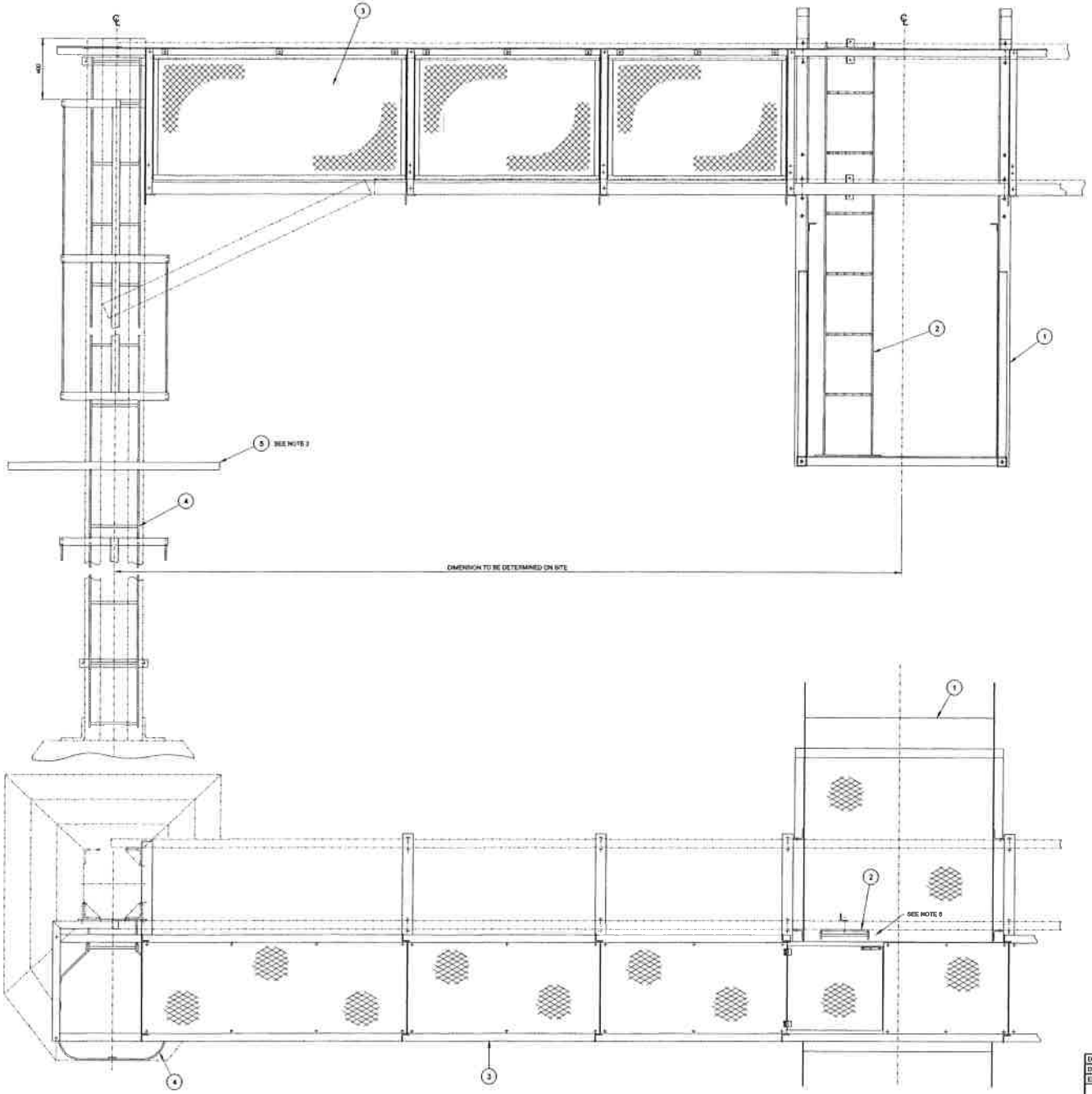

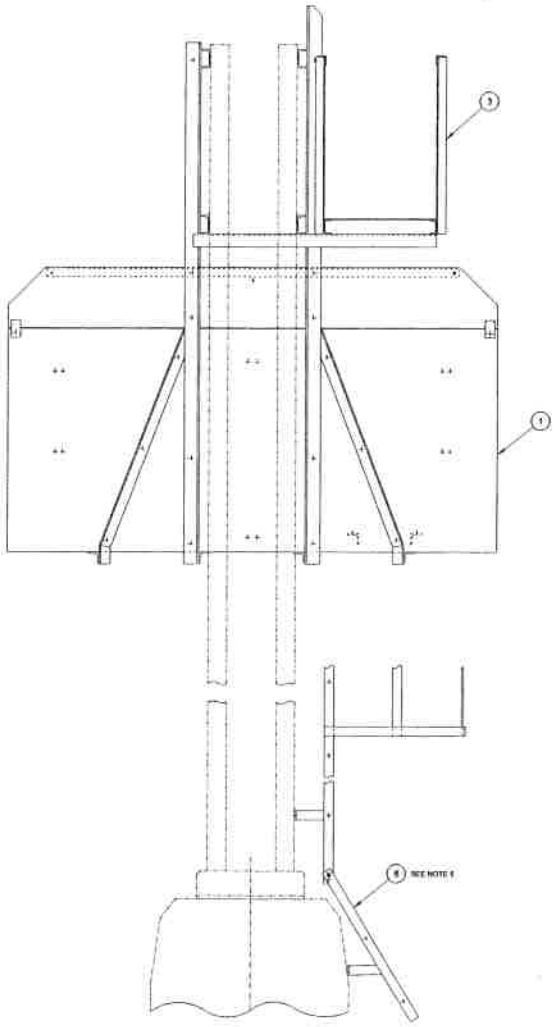

NOTES

1. CERTAIN ITEMS ON DIFFERENT VIEWS OMITTED FOR CLARITY.
2. MOUNT ITEM 5 IN CENTRE OF PORTION OF LADDER WHERE BACKSTRAPS ARE OMITTED.
3. READ THIS DRG IN CONJUNCTION WITH DRG DEPICTING WIRING CLEARANCES FOR SIGNAL GANTRIES. DRG NO CEE-TPA-1
4. THIS CATWALK, SIGNAL CAGE AND LADDER MAY ONLY BE USED WITH LATTICE BRIDGES AND MASTS MANUFACTURED ACCORDING TO DRG NO'S CEE-TMD-27, CEE-TMB-91 AND CEE-TMB-80.
5. WHEN FOUNDATION PROTRUDES EXCESSIVELY ABOVE GROUND LEVEL, ITEM 6 MUST BE USED WITH BOTTOM RUNG ±300 ABOVE GROUND LEVEL.
6. THERE IS NO SCREEN MOUNTED ON LATTICE BRIDGE SIDE OF CATWALK ABOVE CAGE.
7. FOR MASTER RECORD INDEX SEE DOCUMENT NO: 8881317

DO REF: TM0427	GEN TOL: Lins ±	ANGs ±	
DRN: J.V.T.	CHD: J.WIEGERS	DATE: 95-06-16	
ENG: ———	C.E.D.MYHILL	for CHIEF ENG	
CENTRAL DRAWING OFFICE	SPOORNET		

SIGNAL GANTRY

MOUNTED ON LATTICE BRIDGE STRUCTURE

DIMENSIONS: mm
SCALE: 1:10

A0

DRAWING NO: CEE-TMGD - 1

SHEET ← OF →

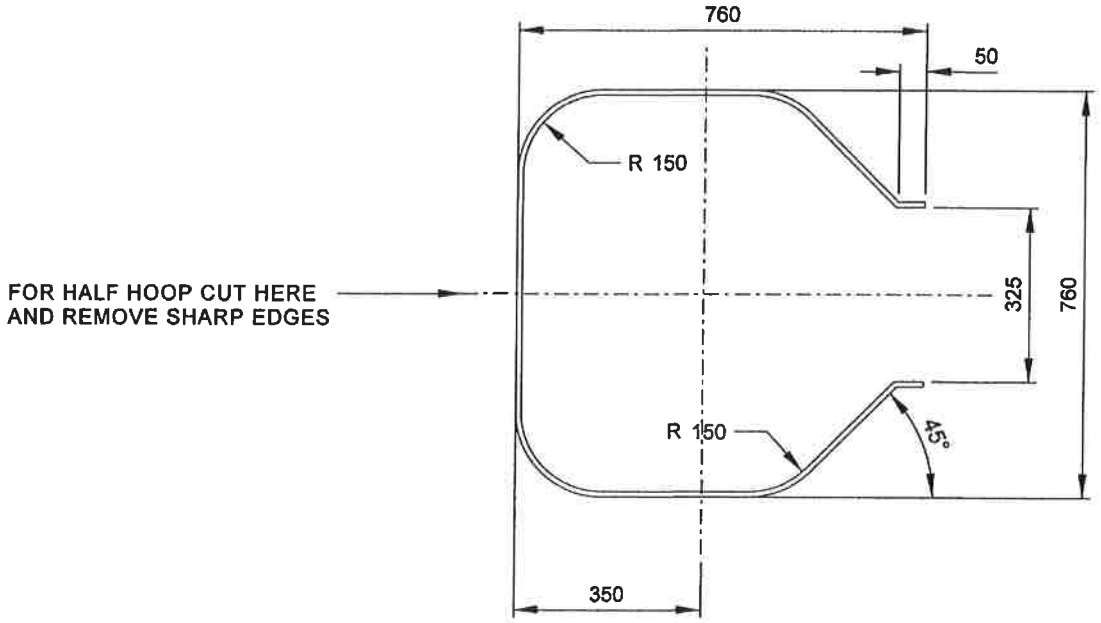

NOTE
FOR MASTER RECORD INDEX SEE DOCUMENT NO. BBB1317.

AMENDMENTS		
NO	NAME	DATE
1	JP du Plessis	95-05-24
DRG UPDATED, PROFILE REVISED. DO REF: T95/028		
2	4/8/2003	
REVISED AND REDRAWN. DO REF: CDP/1772		

MATERIAL: STEEL, FLAT, 50 x 10, ITEM NO ~~(11/12381)~~		
DO REF: T88/042	GEN TOL: LIN± 2 ANG± 0,5°	
DRN: CR MADDISON	CKD: J SWIEGERS	DATE: 89-05-15
ENG: -	CED MYHILL	for CHIEF ENG
CENTRAL DRAWING OFFICE SPOORNET		

HOOP, LADDER
SIGNAL GANTRY STRUCTURE

DIMENSIONS: mm
SCALE: 1:10

A3

DRAWING NO CEE-TMFB - 2

SHEET 3 OF 3

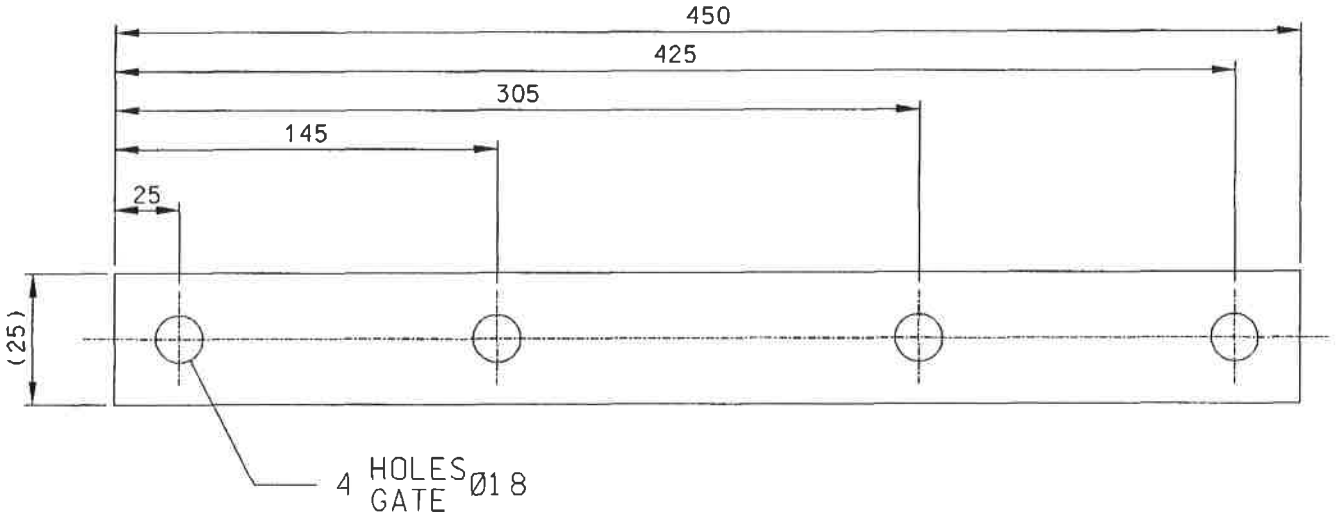

AMENDMENTS WYSIGINGS		
NO	NAME NAAM	DATE DATUM

CEE-TMFB-2 SH/VEL 1
CLASS/ASSY DRG
KLAS/SAMEST-TEK

ELECTRIFICATION TYPES REF DRG NO
CEE-MA-26 SHT 7 B
ELEKTRIFIKASIE TIPES VERW TEK NO
CEE-MA-369 VEL 7 B

DIMENSIONS: MILLIMETRES
AFMETINGS : MILLIMETER

MATERIAL / MATERIAAL			
STEEL, FLAT / STAAL, PLAT	50 X 12	THK / DIK	
STORES ITEM / MAGASYNITEM-	NO 11/12509		
SPEC / SPES	CME-9	SYM / SIM	7

0 100 200

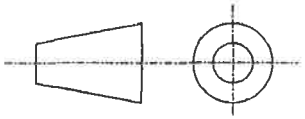

DRN / GET C.R.MADDISON	GEN TOLERANCES: LIN± 1 / ALG TOLERANSIES: ANG/HOEK± ——	
TRCD / NGT CAD	DO REF / TK-VERW T88/42	ENG / IR ——
CKD / NGS J.SWIEGERS	DATE / DATUM 89-05-15	for C.E.D.MYHILL ns.
CHIEF ELECTRICAL ENGINEER / ELEKTRIESE HOOFINGENIEUR		JOHANNESBURG
SOUTH AFRICAN TRANSPORT SERVICES / SUID-AFRIKAANSE VERVOERDIENSTE		

ELECTRIFICATION TYPE / ELEKTRIFIKASIETIPE : GENERAL/ALGEMEEN

BRACKET, MOUNTING, LADDER
SIGNAL GANTRY STRUCTURE
PASSTUK, MONTERING, LEER
SINJAALSTEIERSTRUKTUUR

STORES ITEM / MAGASYNITEM- NO ——

DRAWING / TEKENING NO CEE-TMFB-2

SHEET / VEL 2 OF / VAN 3

A3

TMFB-002-SH-002

TABLE

CONTACT WIRE HEIGHT (REFERENCE)	MAST LENGTH	DIMENSIONS				
		"N"	"M"	"L"	"K"	"J"
5m	8 623	1 800	3 555	8 200	2 500	2 700
6m	9 688	2 700	4 345	9 385	1 885	3 800

ITEM	DESCRIPTION	QTY	STORES ITEM NO	DRAWING NO CEE-
1	BRACKET, MOUNTING	3	-	TMFB-2 SHT 2
2	HOOP	6/8	-	TMFB-2 SHT 3
3	STEEL, FLAT 50 x 10 x "L" LONG ~~-11/12364-~~	2	-	-
4	STEEL, FLAT 50 x10 x "N" + 50mm LONG ~~-11/12364-~~	3	-	-
5	STEEL, FLAT 60 x 10 x 150 LONG ~~-11/12361-~~	8	-	-
6	STEEL, ROUND ø16 x 395 LONG ~~-11/1771-~~	22/25	-	-
7	CLAMPING BOLT WITH WASHERS AND NUTS M16	8	54/3896	TX-82 TYPE 1
8	HOOP, HALF (SEE DRG NO CEE-TMFB-2 SHT 3)	2	-	-
9	STEEL, FLAT 50 x 10 x "J" LONG ~~-11/12361-~~	2	-	-
10	STEEL, FLAT 50 x 10 x "J" - 900mm LONG ~~-11/12361-~~	1	-	-

AMENDMENTS		
NO	NAME	DATE
1	JP du PLESSIS	95 - 05 - 24
	ORG UPDATED & ITEM 2 REVISED DO REF: T95 / 028	
2		
	REVISED AND REDRAWN DO REF: CDO/1772	

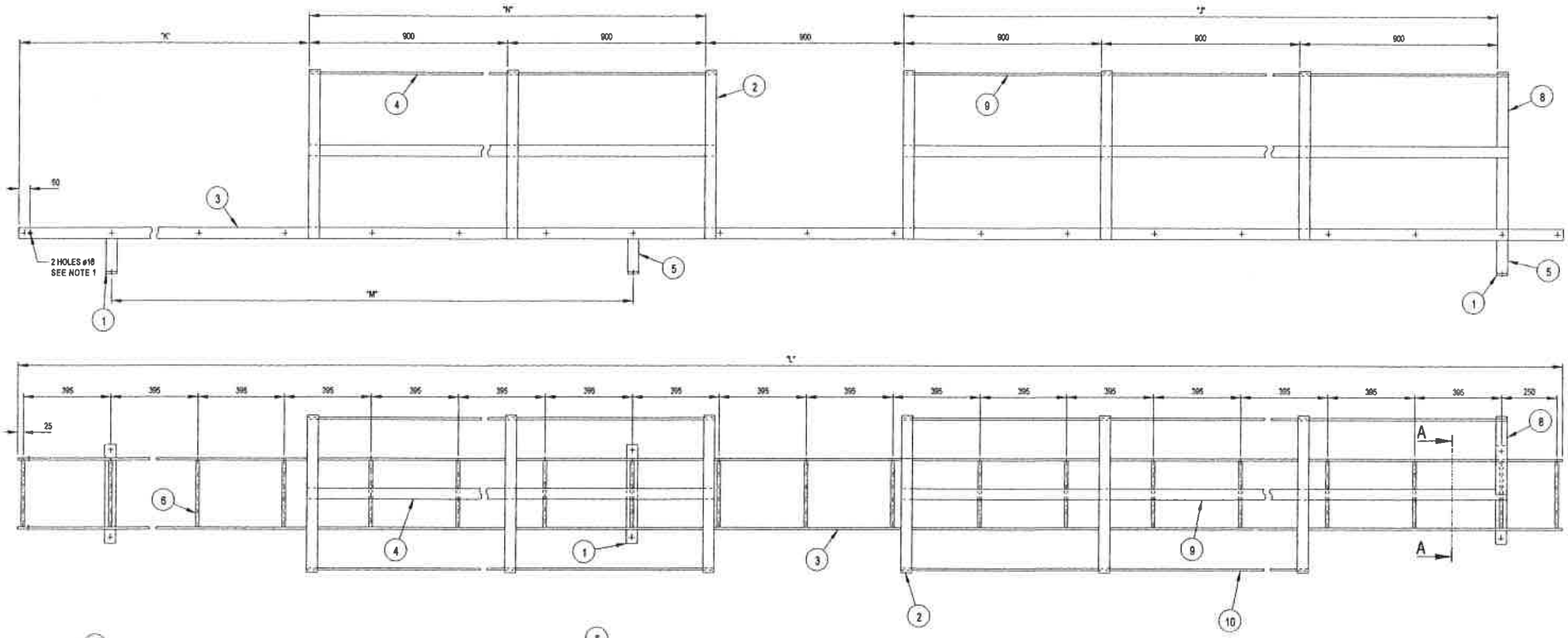

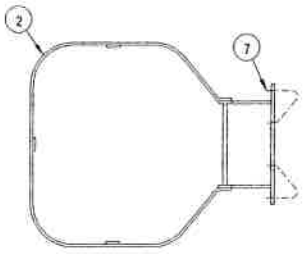

PLAN VIEW

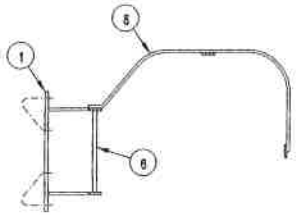

SECTION A-A

WELDING

WELD THUS OR 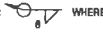 WHERE APPLICABLE (BEFORE FINISH)

FINISH
ZINC COAT TO SPEC SANS 121 FOR CONDITIONS IN SITU.

NOTES
1. THESE HOLES ARE FOR ATTACHMENT OF EXTENSION PIECE LADDER. SEE DRG NO CEE-TMFB-11.
2. FOR MASTER RECORD INDEX SEE DOCUMENT NO. BB81317.

DO REF: T88/042	GEN TOL: LIN ± 1	ANG ± 1°	
DRN: CR MADDISON	CKD: J SWEGERS	DATE: 89-05-15	
ENG: -	CED MYHILL	for CHIEF ENG	
CENTRAL DRAWING OFFICE	SPOORNET		

LADDER
SIGNAL GANTRY STRUCTURE

DIMENSIONS mm
SCALE: 1:10

A1

DRAWING NO CEE - TMFB-2

SHEET 1 OF 3

ITEM	DESCRIPTION	QTY	STORES ITEM NO	DRG NO CEE-
1	SUPPORT, DECK PLATES	2	———	TMFD-3 SHT 2
2	HANDRAIL, OUTER	1	———	TMFD-3 SHT 3
3	HANDRAILS, INNER	*	———	TMFD-3 SHT 4
4	SCREEN: SIDES OF CAT-WALK	*	———	TMFD-3 SHT 5
5	SCREEN: END OF CAT-WALK	1	———	TMFD-3 SHT 6
6	PLATES, DECKING (SEE NOTE 4)	*	———	TMFD-3 SHT 7
7	SUPPORT, CATWALK	*	———	TMFD-3 SHT 8
8	SUPPORT, CATWALK	1	———	TMFD-3 SHT 9
9	SUPPORT, HANDRAIL	*	———	TMFD-3 SHT 10
10	POST, HANDRAIL	2	———	TMFD-3 SHT 11
~~11~~	~~POST, HANDRAIL~~	~~1~~	~~———~~	~~TMFD-3 SHT 12~~
12	TRAPDOOR	*	———	TMFD-3 SHT 13

* AS REQUIRED

ITEM	DESCRIPTION	QTY	STORES ITEM NO	DRG NO CEE-
13	HANDRAIL, LADDER-END	1	———	TMFD-3 SHT 14
14	U-BOLT, M20 WITH NUTS & WASHERS	*	———	TMFD-3 SHT 15
15	CLAMPING BOLT WITH WASHERS & NUTS M16	2	54/3898	TX-62 TYPE I
16	BOLT, STEEL, HEX HD. & NUT, GALV M20 x 45L	*	———	———
17	BOLT, STEEL, HEX HD. & NUT, GALV. M16 X 40L	*	———	———
18	BOLT, STEEL, HEX HD. & NUT, GALV M12 x 40L	*	———	———
19	BOLT, STEEL, HEX HD. & NUT, GALV. M10 x 25L	*	———	———
20	WASHER, FLAT, STEEL, BLACK, ROUND, GALV. M20	*	———	———
21	WASHER, FLAT, STEEL, BLACK, ROUND, GALV. M16	*	———	———
22	WASHER, FLAT, STEEL, BLACK, ROUND, GALV. M12	*	———	———
23	WASHER, FLAT, STEEL, BLACK, ROUND, GALV. M10	*	———	———
24	WASHER, BEVEL, STEEL, GALV. M12	*	———	———

* AS REQUIRED

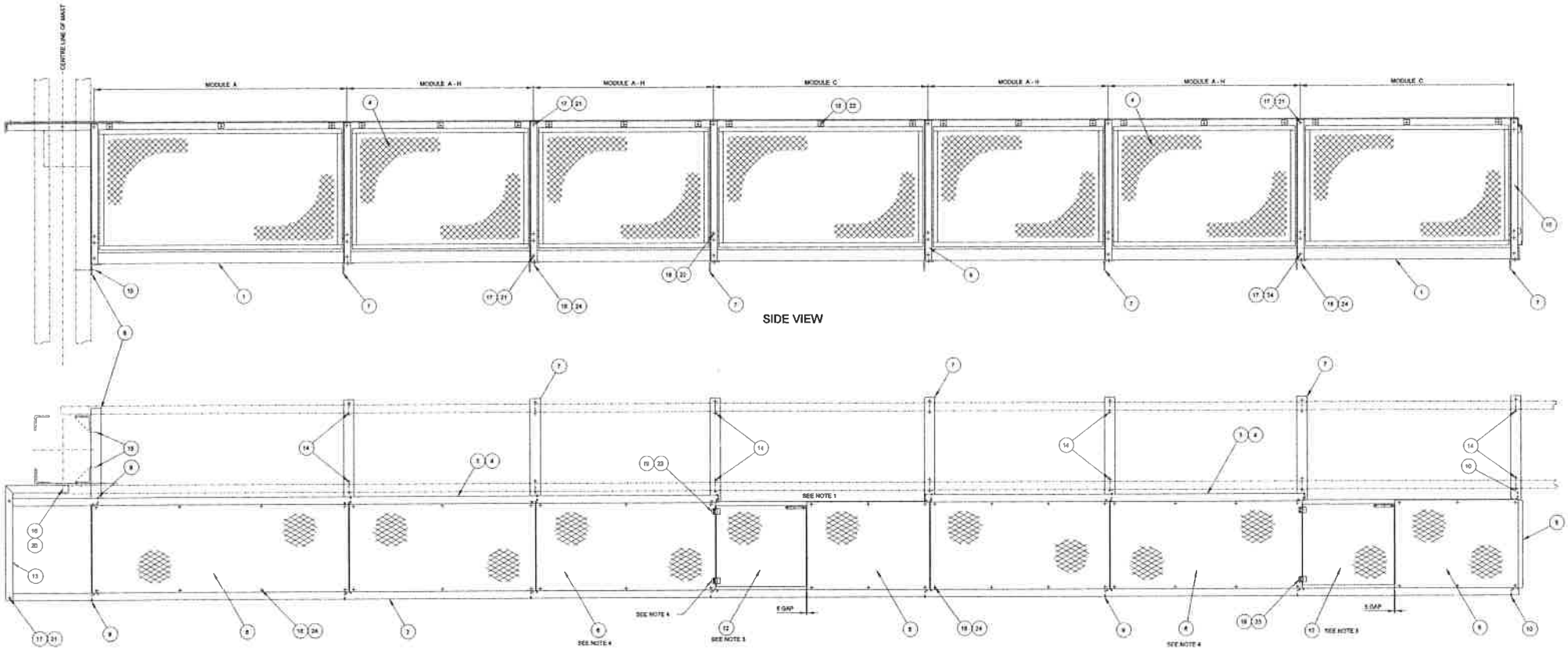

PLAN VIEW

NOTES

1. THE MAST-TO-MAST AND TRACK-TO-TRACK CENTRES OF LATTICE BRIDGES VARY FOR DIFFERENT APPLICATIONS. THEREFORE THE SPACING OF CROSS BRACES IS NOT ALWAYS STANDARD. TO ENSURE THAT ITEMS 7 AND THE SIGNAL CAGES FIT IN THE DESIRED POSITION, A CAREFUL COMBINATION FROM MODULES "A" TO "U" MUST BE MADE. USE MODULE "H" ONLY WHEN ESSENTIAL.
2. ALWAYS USE CORRESPONDING MODULES FOR HANDRAILS, DECK PLATES AND SUPPORTS e.g. MODULE "A" HANDRAIL, MODULE "A" SCREEN, MODULE "A" DECK PLATE AND MODULE "A" SUPPORT MUST CORRESPOND.
3. THE HINGED SIDE OF THE TRAPDOOR MUST FACE THE CATWALK ENTRANCE AND BE SECURED IN THE OPEN POSITION BY HOOKING THE HOOK ONTO ITEM 2 OR 3, WHEN REQUIRED
4. SUITABLE ø12 MOUNTING HOLES FOR THE ATTACHMENT OF TRAPDOOR HINGE, MUST BE PROVIDED IN THE DECKING PLATE ON THE LADDER SIDE OF EACH TRAPDOOR
5. FOR MASTER RECORD INDEX SEE DOCUMENT NO. 8001377.

AMENDMENTS		
NO	NAME	DATE
1	W BRIGHT	02 - 11 - 04
ITEMS 9 & 10 REVISED ITEM 11 DELETED DO REF: T91 / 085		
2	JP du Plessis	05 - 05 - 24
REVISED AND REDRAWN DO REF: T95 / 028		
3	[illegible]	[illegible]
REVISED AND REDRAWN DO REF: CDO/1772		

DO REF: T95 / 043	GEN TOL: LIN ± - ANG ± -		
DRN: J V T	CKD: J SANDERS	DATE: 89 - 06 - 15	
ENG: ———	C E D MYNILL	for CHIEF ENG	
CENTRAL DRAWING OFFICE	SPOORNET		

CATWALK
SIGNAL GANTRY STRUCTURE

DIMENSIONS: mm
SCALE: 1:10

A0

DRAWING NO CEE-TMFD - 3

SHEET 1 OF 15

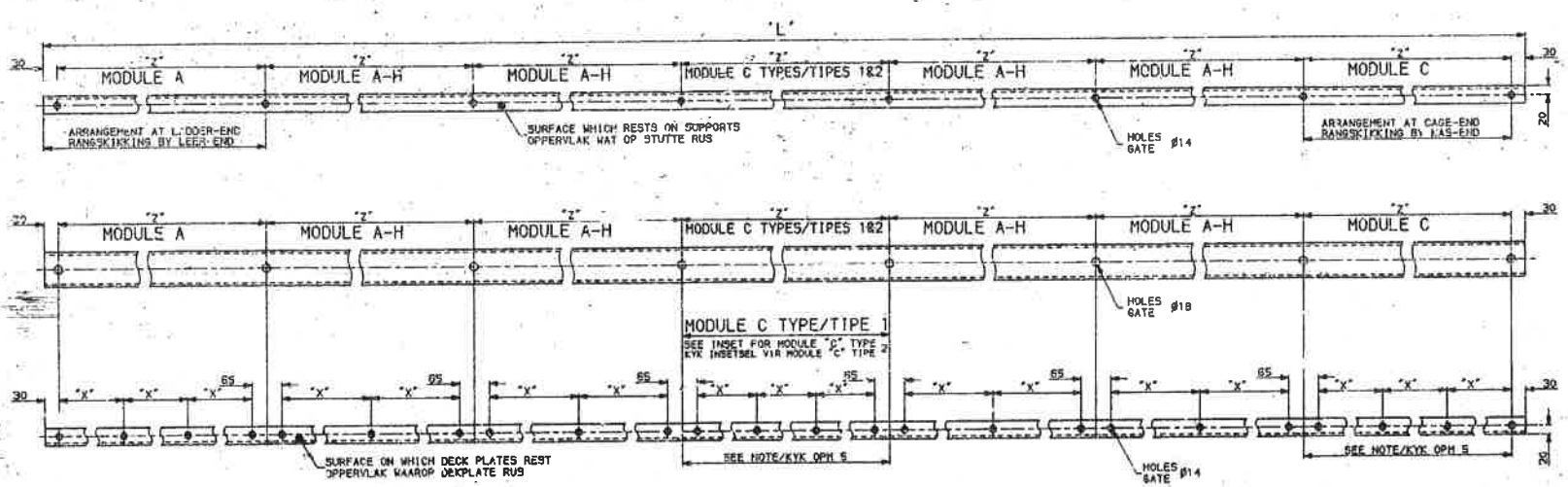

ITEM 1: RIGHT HAND SIDE
REGTERKANT

ITEM 2: LEFT HAND SIDE, REVERSED OF ITEM 1
LINKERKANT, OMGEKEERDE VAN

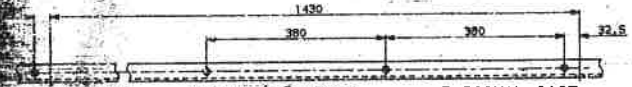

ARRANGEMENT FOR MODULE 'C' (TYPE 2) ABOVE SIGNAL CAGE
RANGSKIKKING VIR MODULE 'C' (TIPE 2) BOKANT SINJAALKAS
SEE NOTE/KYK OPM 5

MODULE	DIMENSION AFMETING "X"	DIMENSION AFMETING "Z"
A- STANDARD AT LADDER END MAY BE USED ELSEWHERE / STANDAARD BY LEER-END MAG ELDERS GEBRUIK WORD	555	1730
B- INTERMEDIATE / TUSSENLIGGEND	505	1580
C- STANDARD ABOVE SIGNAL CAGE MAY BE USED ELSEWHERE / STANDAARD BOKANT SINJAALHOK MAG ELDERS GEBRUIK WORD	TYPE 1 450 / TIPE 1	1430
D- INTERMEDIATE / TUSSENLIGGEND	607,5	1280
E- INTERMEDIATE / TUSSENLIGGEND	532,5	1130
F- INTERMEDIATE / TUSSENLIGGEND	457,5	980
G- INTERMEDIATE / TUSSENLIGGEND	382,5	830
H- VARIES ACCORDING TO SPECIFIC REQUIREMENTS BUT BETWEEN MODULES ABG / VARIEER VOLGENS SPESIFIEKE VEREISTES MAAR TUSSEN MODULES ABG	"Z"-65 2 OR/OF 3	*

*TO BE DETERMINED ON SITE
*MOET OP TERREIN BEPAAL WORD

NOTES / OPMERKINGS

1. DIMENSION 'L' IS DETERMINED BY ADDING MODULE 'A' PLUS A COMBINATION OF SELECTED MODULES RANGING FROM 'A' TO 'H' PLUS MODULE 'C'. MODULE 'A' WILL ALWAYS BE AT THE LADDER-END AND MODULE 'C' AT THE OTHER END.
AFMETING 'L' WORD BEPAAL DEUR MODULE 'A' PLUS 'N KOMBINASIE VAN GEKOSE MODULES VAN 'A' TOT 'H' PLUS MODULE 'C' BYMEKAAR TE TEL. MODULE 'A' SAL ALTYD AAN DIE LEER-END EN MODULE 'C' AAN DIE ANDER-END WEES.

2. ARRANGEMENT SHOWN IS WITH LADDER AGAINST LEFTHAND MAST. USE A REVERSE OF THIS ARRANGEMENT FOR LADDER AGAINST RIGHTHAND MAST.
RANGSKIKKING GETOON IS MET LEER TEEN LINKERKANTSTE MAS. GEBRUIK 'N OMGEKEERDE VAN HIERDIE RANGSKIKKING VIR LEER TEEN REGTERKANTSTE MAS.

3. THE SUPPORT FOR DECK PLATES TO BE MANUFACTURED FROM ONE CONTINUOUS LENGTH OF STEEL CHANNEL.
DIE STEUN VIR DEKPLATE MOET UIT 'N AANEENLOPENDE LENGTE KANAALSTAAL VERVAARDIG WORD.

4. ALSO REFER TO NOTES 1 & 2 ON DRG
VERWYS OOK NA OPMERKINGS 1 & 2 OP TEK NO CEE-TMFD-3 SHT 1 VEL 1

5. MODULE 'C' ARRANGEMENT TYPE 1 / RANGSKIKKING TIPE 1 IS USED WHEN A MODULE 'C' IS REQUIRED IN A POSITION OTHER THAN ABOVE A SIGNAL CAGE.
WORD GEBRUIK WANNEER 'N MODULE 'C' BENODIG WORD IN 'N POSISIE MAT NIE BOKANT 'N SINJAALKAS IS NIE.

ARRANGEMENT TYPE 2 / RANGSKIKKING TIPE 2 IS USED TOGETHER WITH A TRAPDOOR ABOVE A SIGNAL CAGE.
WORD SAAM MET 'N VALDEUR BOKANT 'N SINJAALKAS GEBRUIK.

FINISH/AFWERKING

ZINC COAT TO SPEC
SINKBEDEK VOLGENS SPES SABS 763

DIMENSIONS: MILLIMETRES
AFMETINGS: MILLIMETER

MATERIAL: MATERIAAL
STEEL CHANNEL 76x38x5 THK / STAAL KANAAL DIK
STORES ITEM NO 11/4144
SPEC SPES CME 9 SYN EIN 8

DRN J. VAN TONDER
CHKD CAD/JVY
APPD J. SWIEGERS
DATE 88-05-16
CHIEF ELECTRICAL ENGINEER
ELEKTRIESE HOOF-INGENIEUR
SOUTH AFRICAN TRANSPORT SERVICES
SUID-AFRIKAANSE VERVOERDIENSTE
JOHANNESBURG

GEN TOLERANCES: LINS ALG TOLERANSIES: ANG/HOEKE
TO BSP
TEST 188/42
for CSE

ELECTRIFICATION TYPES / ELEKTRIFISASIETIPES. GENERAL/ALGEMEEN

SUPPORT, DECK PLATES
CATWALK
STEUN, DEKPLATE
LOOPLYS

CEE-TMFD-3 SHT 1 VEL 1
ASSY DRG
RAMSST-TEK
ELECTRIFICATION TYPES REFERENCE DRG NO
CEE-MA-26 SH 78
ELEKTRIFISASIETIPES VERWYSINGSTEK-NO
CEE-MA-26V SH 78
STORES ITEM NO
BERGINGS ITEM NO
TEKENING NO CEE-TMFD-3
SHEET VEL 2 OF VAN 15

A1

TMFD-3 SHT 2

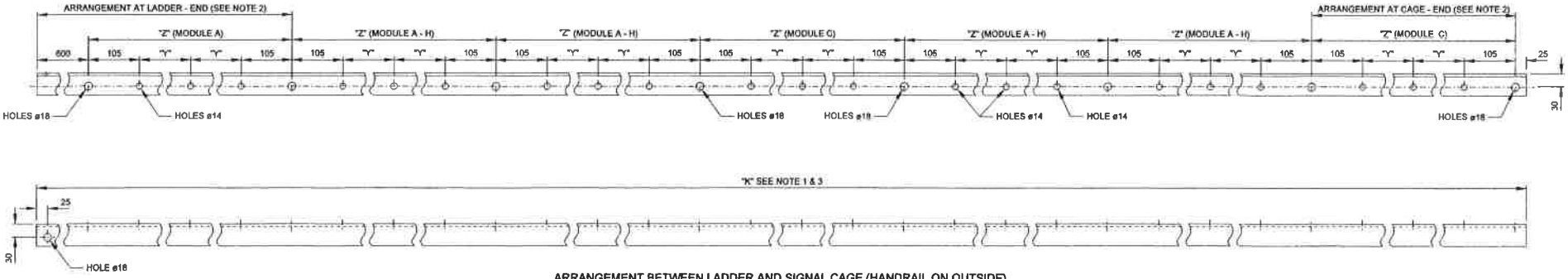

ARRANGEMENT BETWEEN LADDER AND SIGNAL CAGE (HANDRAIL ON OUTSIDE)
(SEE NOTE 2)

MODULE		DIMENSION "Y"	DIMENSION "Z"
A -	STANDARD AT LADDER END MAY BE USED ELSEWHERE	760	1730
B -	INTERMEDIATE	685	1580
C -	STANDARD ABOVE SIGNAL CAGE MAY BE USED ELSEWHERE	610	1430
D -	INTERMEDIATE	535	1280
E -	INTERMEDIATE	460	1130
F -	INTERMEDIATE	385	980
G -	INTERMEDIATE	310	830
H -	VARIES ACCORDING TO SPECIFIC REQUIREMENTS BUT BETWEEN MODULES A & G	"Z" - 210 / 2	*

* TO BE DETERMINED ON SITE

NOTES

1 DIMENSION "K" IS DETERMINED BY ADDING 600 PLUS MODULE "A" PLUS A COMBINATION OF SELECTED MODULES RANGING FROM "A" TO "H" PLUS MODULE "C". MODULE "A" WILL ALWAYS BE AT THE LADDER-END AND MODULE "C" AT THE OTHER END.

2 ARRANGEMENT SHOWN IS WITH LADDER AGAINST LEFTHAND MAST. USE A REVERSE OF THIS ARRANGEMENT FOR LADDER AGAINST RIGHTHAND MAST.

3 HANDRAIL TO BE MANUFACTURED FROM ONE CONTINUOUS LENGTH OF STEEL ANGLE.

4 ALSO REFER TO NOTES 1 & 2 ON DRG NO CEE-TMFD-3 SHT 1.

5 FOR MASTER RECORD INDEX SEE DOCUMENT NO. BBB1317.

FINISH
ZINC COAT TO SPEC SANS 121 FOR CONDITIONS IN SITU.

AMENDMENTS		
NO	NAME	DATE
1	JP du Plessis	05 - 05 - 24
REVISED AND REDRAWN. DIMENSION 800 WAS 400. DO REF: T95 / 028		
2	[illegible]	
REVISED AND REDRAWN DO REF: CDO/1772		

MATERIAL: ITEM NO	(11/H4401), STEEL, ANGLE, 50 x 50 x 6		
DO REF: T88 / 042	GEN TOL: LIN ±	1	ANG ± -
DRN: J V T	CKD: J SWEGERS	DATE: 89-05-15	
ENG: ———	C E D MYHILL	for CHIEF ENG	
CENTRAL DRAWING OFFICE	SPOORNET		

HANDRAIL, OUTER

CATWALK

DIMENSIONS: mm
SCALE: 1:5

A1

DRAWING NO CEE-TMFD - 3

SHEET 3 OF 15

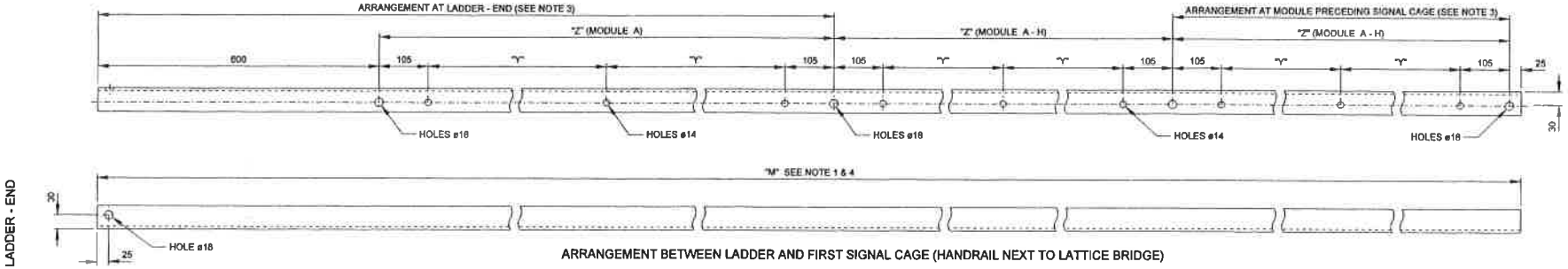

ARRANGEMENT BETWEEN LADDER AND FIRST SIGNAL CAGE (HANDRAIL NEXT TO LATTICE BRIDGE)

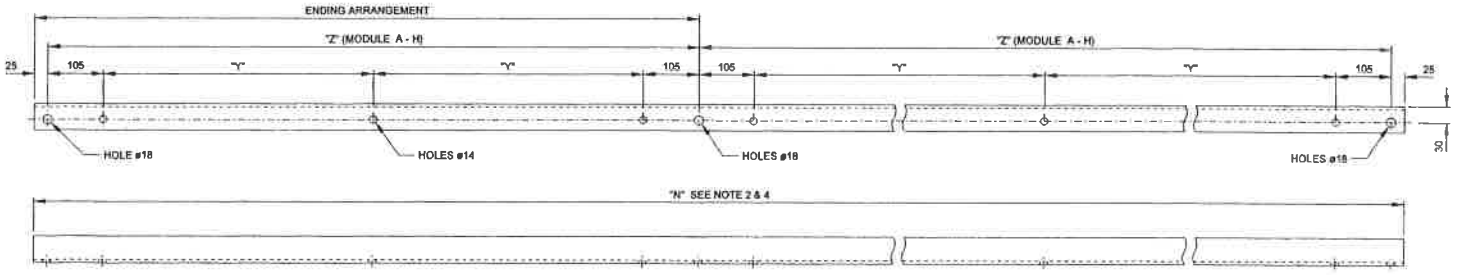

ARRANGEMENT BETWEEN SIGNAL CAGES (HANDRAIL NEXT TO LATTICE BRIDGE)
(SEE NOTE 3)

MODULE	DIMENSION "Y"	DIMENSION "Z"
A – STANDARD AT LADDER END MAY BE USED ELSEWHERE	760	1730
B – INTERMEDIATE	685	1580
C – STANDARD ABOVE SIGNAL CAGE MAY BE USED ELSEWHERE	610	1430
D – INTERMEDIATE	535	1280
E – INTERMEDIATE	460	1130
F – INTERMEDIATE	385	980
G – INTERMEDIATE	310	830
H – VARIES ACCORDING TO SPECIFIC REQUIREMENTS BUT BETWEEN MODULES A & G	$\frac{"Z" - 210}{2}$	*

* TO BE DETERMINED ON SITE

NOTES

1 DIMENSION "M" IS DETERMINED BY ADDING 600 PLUS MODULE "A" PLUS A COMBINATION OF SELECTED MODULES RANGING FROM "A" TO "H". MODULE "A" WILL ALWAYS BE AT THE LADDER-END AND THE HANDRAIL WILL END AT THE END OF THE MODULE PRECEDING THE FIRST SIGNAL CAGE.

2 DIMENSION "N" IS DETERMINED BY ADDING COMBINATIONS OF SELECTED MODULES RANGING FROM "A" TO "H". THIS HAND-RAIL WILL ALWAYS BEGIN AND END IN AN ENDING ARRANGEMENT.

3 ARRANGEMENT SHOWN IS WITH LADDER AGAINST LEFTHAND MAST. USE A REVERSE OF THIS ARRANGEMENT FOR LADDER AGAINST RIGHTHAND MAST.

4 HANDRAIL TO BE MANUFACTURED FROM ONE CONTINUOUS LENGTH OF STEEL ANGLE.

5 ALSO REFER TO NOTES 1 & 2 ON DRG NO CEE-TMFD-3 SHT 1

6 FOR MASTER RECORD INDEX SEE DOCUMENT NO. BBB1317.

FINISH
ZINC COAT TO SPEC SANS 121 FOR CONDITIONS IN SITU.

AMENDMENTS		
NO	NAME	DATE
1	JP du Plessis	05 - 05 - 24
REVISED AND REDRAWN. DIMENSION 600 WAS 400. DO REF: T95 / 028		
2		
REVISED AND REDRAWN. DO REF: CDO/1772		

MATERIAL: ITEM NO	(11/14481) , STEEL, ANGLE, 50 x 50 x 6THK		
DO REF: T88 / 042	GEN TOL: LIN ± 1	ANG ± -	
DRN: J V T	CKD: J SWEGERS	DATE: 09 - 05 - 15	
ENG:	C E D MYHILL	for CHIEF ENG	
CENTRAL DRAWING OFFICE	SPOORNET		

HANDRAIL, INNER

CATWALK

DIMENSIONS: mm
SCALE: 1:5

A1

DRAWING NO CEE-TMFD - 3

SHEET 4 OF 15

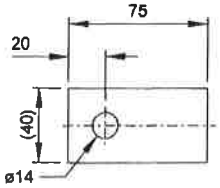

ITEM 3
SCALE 1:2

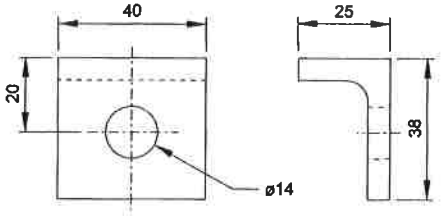

ITEM 4
SCALE 1:1

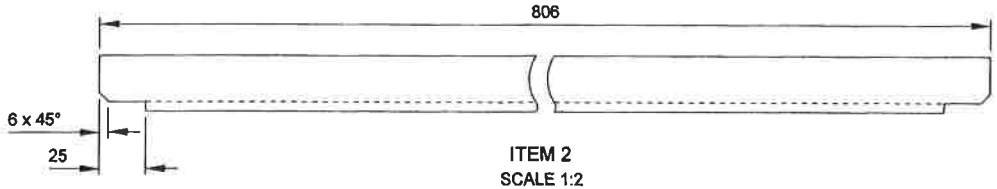

ITEM 2
SCALE 1:2

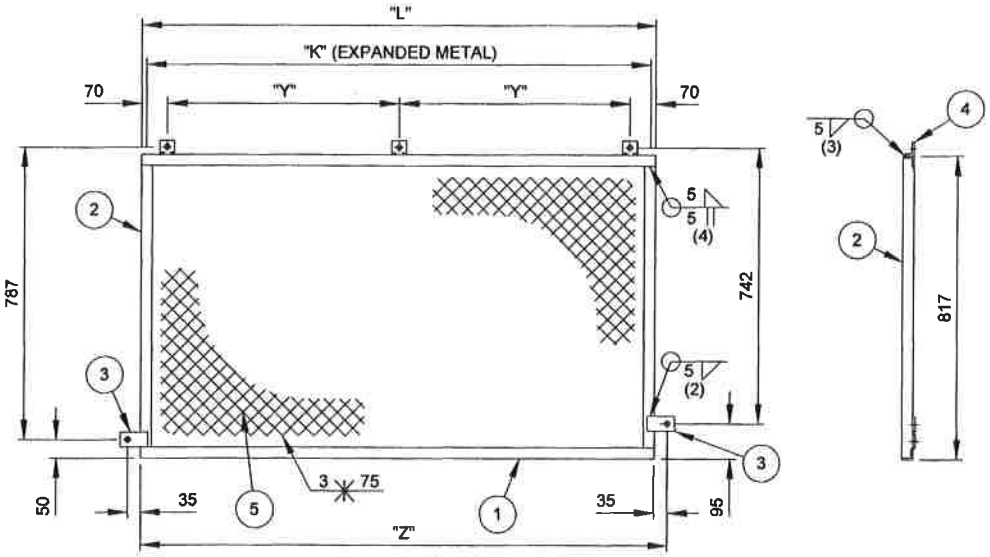

ASSEMBLY

ITEM	DESCRIPTION		QTY	STORES ITEM NO	DRG NO CEE-
1	STEEL,ANGLE 30 x 30 x 5 x "L"	~~11/14444~~	2		
2	STEEL,ANGLE 30 x 30 x 5 x 806L	~~11/14444~~	2		
3	STEEL,FLAT 40 x 6 x 75L	~~11/12255~~	2		
4	STEEL,ANGLE 45 x 45 x 6 x 40L	~~11/14468~~	3		
5	EXPANDED METAL "K" x 790 x 3		1		

MODULE	DIMENSIONS			
	"L"	"K"	"Y"	"Z"
A- STANDARD AT LADDER END MAY BE USED ELSEWHERE	1 660	1 635	760	1 730
B- INTERMEDIATE	1 510	1 485	685	1 580
C- STANDARD ABOVE SIGNAL CAGE MAY BE USED ELSEWHERE	1 360	1 335	610	1 430
D- INTERMEDIATE	1 210	1 185	535	1 280
E- INTERMEDIATE	1 060	1 035	460	1 130
F- INTERMEDIATE	910	885	385	980
G- INTERMEDIATE	760	735	310	830
H- VARIES ACCORDING TO SPECIFIC REQUIREMENTS BUT BETWEEN MODULES A&G	"Z" - 70	"Z" - 95	$\frac{\text{"Z"} - 210}{2}$	*

* TO BE DETERMINED ON SITE

FINISH
ZINC COAT TO SPEC SANS 121 FOR CONDITIONS IN SITU.

NOTES
1. ALSO REFER TO NOTES ON DRG NO CEE-TMFD-3 SHT 1.
2. FOR MASTER RECORD INDEX SEE DOCUMENT NO. BBB1317.

AMENDMENTS		
NO	NAME	DATE
1	W.BRIGHT	92-11-04

DIMENSIONS "L" & "K" SHORTENED BY 10.
ITEM 3 WAS 70 LONG.
DO REF: T91/065

2	4/8/1993	

REVISED AND REDRAWN.
DO REF: CDO/1772

DIMENSIONS:mm
SCALE: 1:10

A2

DO REF T88 / 42	GEN TOL: LIN ± 1	ANG ± 1°
DRN J v TONDER	CKD J SWIEGERS	DATE 89 - 05 - 15
ENG	C.E.D. MYHILL	for CHIEF ENG
CENTRAL DRAWING OFFICE SPOORNET		

SCREEN: SIDES OF CATWALK(VARIOUS)

CATWALK

DRAWING NO CEE-TMFD - 3

SHEET 5 OF 15

ITEM	DESCRIPTION		QTY	STORES ITEM NO	DRG NO CEE-
1	STEEL,ANGLE 30 x 30 x 5 x 594L	~~11/14444~~	2		
2	STEEL,ANGLE 30 x 30 x 5 x 806L	~~11/14444~~	2		
3	STEEL,FLAT 40 x 6 x 70L	~~11/12255~~	4		
4	EXPANDED METAL 790 x 568 x 3		1		

AMENDMENTS		
NO	NAME	DATE
1	W.BRIGHT	92-11-04

ITEM 3: 25 DIM WAS 20. ITEM 3 ON RIGHT BOTTOM OF ASSEMBLY MOVED DOWN TO 50. DO REF: T91 / 065

2 4/6/2003

REVISED AND REDRAWN. DO REF: CDO/1772

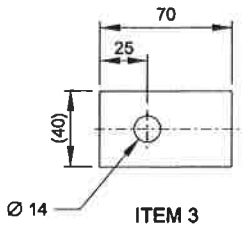

ITEM 3
SCALE 1:2

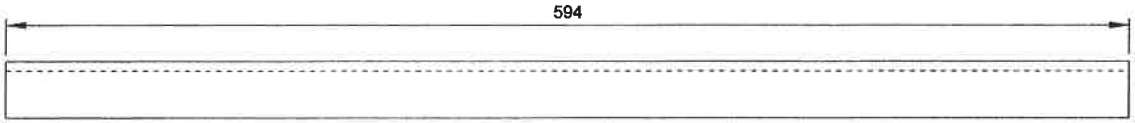

ITEM 1

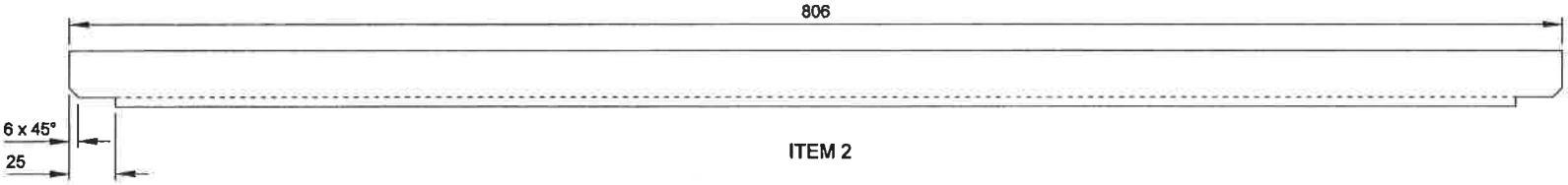

ITEM 2

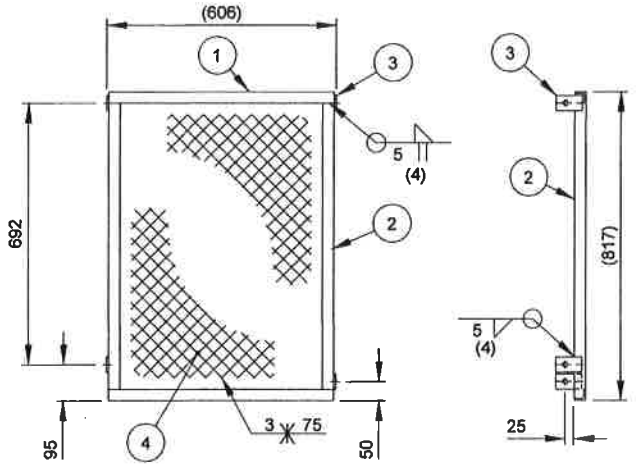

ASSEMBLY
SCALE 1:10

FINISH
ZINC COAT TO SPEC SANS 121

NOTE
FOR MASTER RECORD INDEX SEE DOCUMENT NO. BBB1317.

DO REF T88 / 42	GEN TOL: LIN ± 1	ANG ± 1°
DRN J v TONDER	CKD J SWIEGERS	DATE 89 - 05 - 15
ENG ————	C.E.D. MYHILL	for CHIEF ENG
CENTRAL DRAWING OFFICE SPOORNET		

SCREEN: END OF CATWALK

CATWALK

DIMENSIONS:mm
SCALE: 1:2

A2

DRAWING NO CEE-TMFD - 3

SHEET 6 OF 15

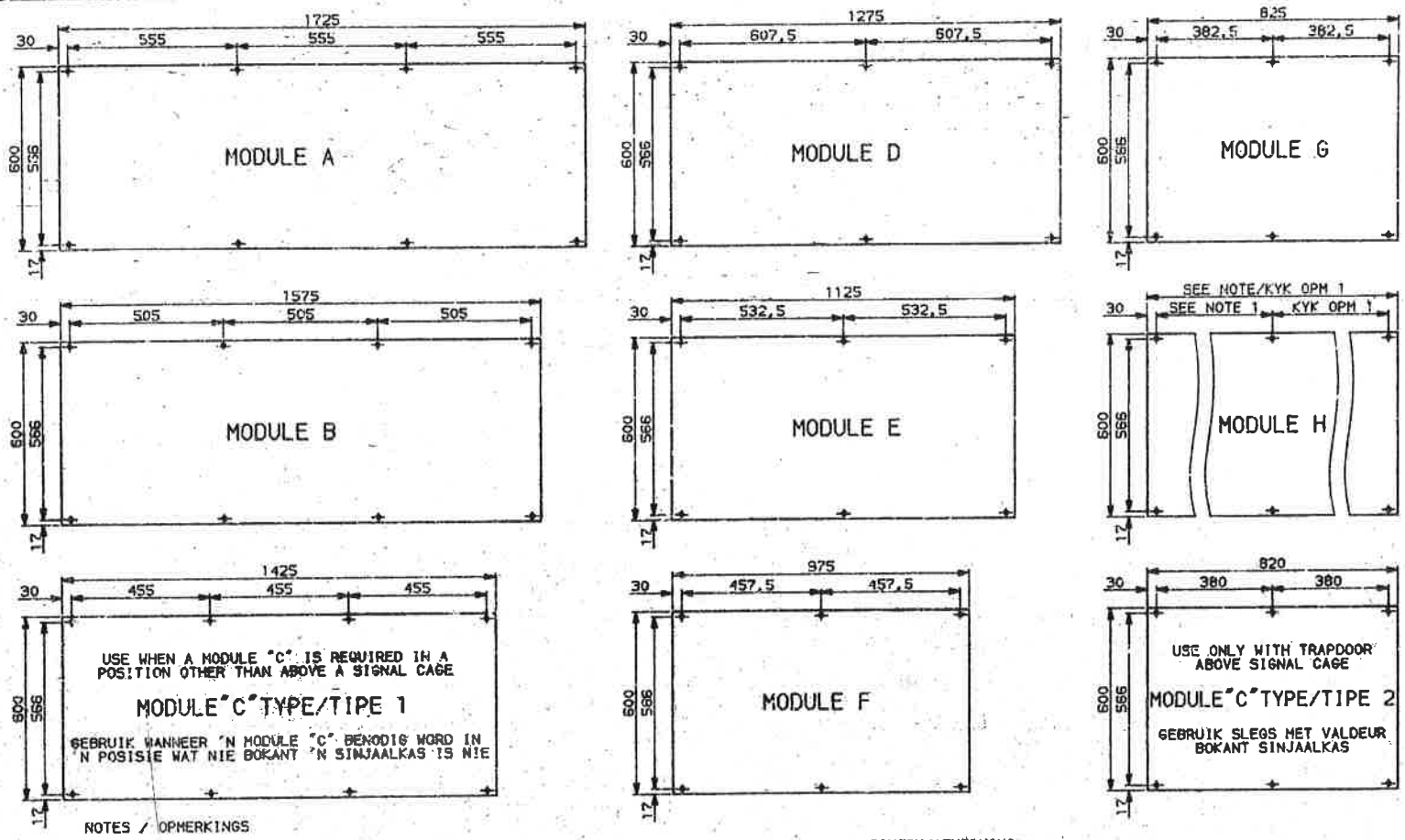

NOTES / OPMERKINGS

1 MODULE "H" VARIES ACCORDING TO SPECIFIC REQUIREMENTS, BUT BETWEEN MODULES "A" & "G". SPACING OF MOUNTING HOLES TO BE ADJUSTED ACCORDINGLY, TO MATCH DECK PLATE SUPPORTS.
MODULE "H" VARIEER VOLGENS SPESIFIEKE VEREISTES, MAAR TUSSEN MODULES "A" & "G". SPASIERING VAN MONTEERGATE MOET DIENOOREENKOMSTIG AANGEPAS WORD OM DEKPLAATSTEUNSTUKKE TE PAS.

2 ALSO REFER TO NOTE 4 ON DRG CEE-TMFD-3 SHT 1
VERWYS OOK NA OPM 4 OP TEK CEE-TMFD-3 VEL 1

3 ALL HOLES Ø14
ALKE GATE

FINISH/AFWERKING

ZINC COAT TO SPEC
SINKBEDEK VOLGENS SPES SABS 763

0 500 1000

DIMENSIONS, MILLIMETRES
AFMETINGS, MILLIMETER

MATERIAL / MATERIAAL
STEEL, CHEQUER PLATE 6 THK
STAAL, GERUITE PLAAT DIK
STORES ITEM NO 11/
MAGASYNITEM
SPEC CME 9 SYM
SPES SIM

DRN GET J.VAN TONDER	GEN TOLERANCES, LIN± 1 ALG TOLERANSIES, ANG/HOEK± 1°		
TRCD NGT CAD/JVT	DO REF TK-VERW T88/42	ENG IR	
CKD NGS J.SWIEGERS	DATE DATUM 89-05-15	C.E.D. Mylill for ns.	
CHIEF ELECTRICAL ENGINEER ELEKTRIESE HOOFINGENIEUR		JOHANNESBURG	
SOUTH AFRICAN TRANSPORT SERVICES SUID-AFRIKAANSE VERVOERDIENSTE			

ELECTRIFICATION TYPES / ELEKTRIFIKASIETIPES, GENERAL/ALGEMEEN

PLATES, DECKING
CATWALK
PLATE, DEK-
LOOPLYS

AMENDMENTS
WYSIGINGS

NO	NAME NAAM	DATE DATUM

CEE-TMFD-3 SHT VEL 1

ASSY DRG
SAMEST-TEK

ELECTRIFICATION TYPES
REFERENCE DRG NO
CEE-MA-26 SH 7B
ELEKTRIFIKASIETIPES
VERWYSINGSTEK-NO
CEE-MA-369 VEL 7B

STORES ITEM NO
MAGASYNITEM

DRAWING NO CEE-TMFD-3
TEKENING

SHEET 7 OF 15
VEL VAN

A2

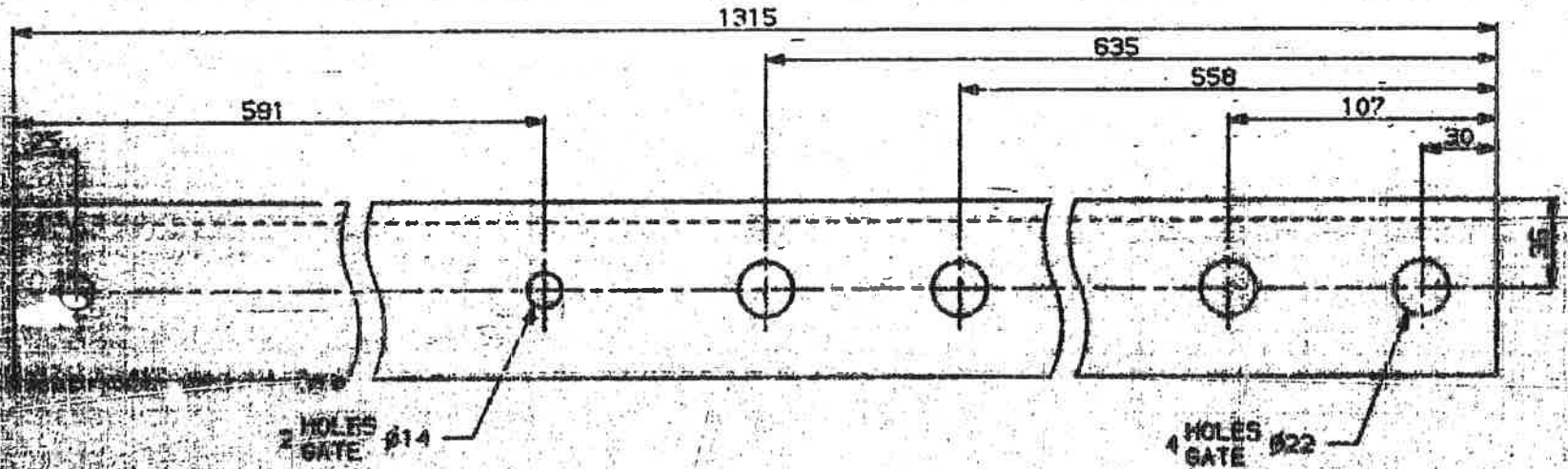

DIMENSIONS: MILLIMETRES
AFMETINGS : MILLIMETER

MATERIAL/MATERIAAL

STEEL, ANGLE / STAAL, HOEK 70x70x10 THK / DIK
STORES ITEM / MAGASYNITEM- NO 11/14508
SPEC / SPES CME 9 SYM / SIM 8

FINISH/AFWERKING

ZINC COAT TO SINKBEDEK VOLG. SABS 763

0 100 200

DRN / GET	J.VAN TONDER	GEN TOLERANCES, LIN± 1 / ALG TOLERANSIES, ANG/HOEK±	
TRCD / NGT	CAD/JVT	DO REF / TK-VERW T88/42	ENG / IR
CKD / NGS	J.SWIEGERS	DATE / DATUM 89-05-15	C.E.S. Myl:11 for ns.

CHIEF ELECTRICAL ENGINEER
ELEKTRIESE HOOFINGENIEUR
JOHANNESBURG

SOUTH AFRICAN TRANSPORT SERVICES
SUID-AFRIKAANSE VERVOERDIENSTE

ELECTRIFICATION TYPES / ELEKTRIFIKASIETIPES, GENERAL/ALGEMEEN

SUPPORT, CATWALK (LATTICE BRIDGE)
SIGNAL GANTRY STRUCTURE
STEUN, LOOPLYS (TRALIEBRUG)
SINJAALSTEIERSTRUKTUUR

AMENDMENTS
WYSIGINGS

NO	NAME NAAM	DATE DATUM

CEE-TMFD-3 SHT / VEL 1

ASSY DRG
SAMEST-TEK

ELECTRIFICATION TYPES
REFERENCE DRG NO
CEE-MA-26 SH 7B
ELEKTRIFIKASIETIPES
VERWYSINGSTEK-NO
CEE-MA-369 VEL 7B

STORES ITEM / MAGASYNITEM NO

DRAWING / TEKENING NO CEE-TMFD-3

SHEET / VEL 8 OF / VAN 15

A3

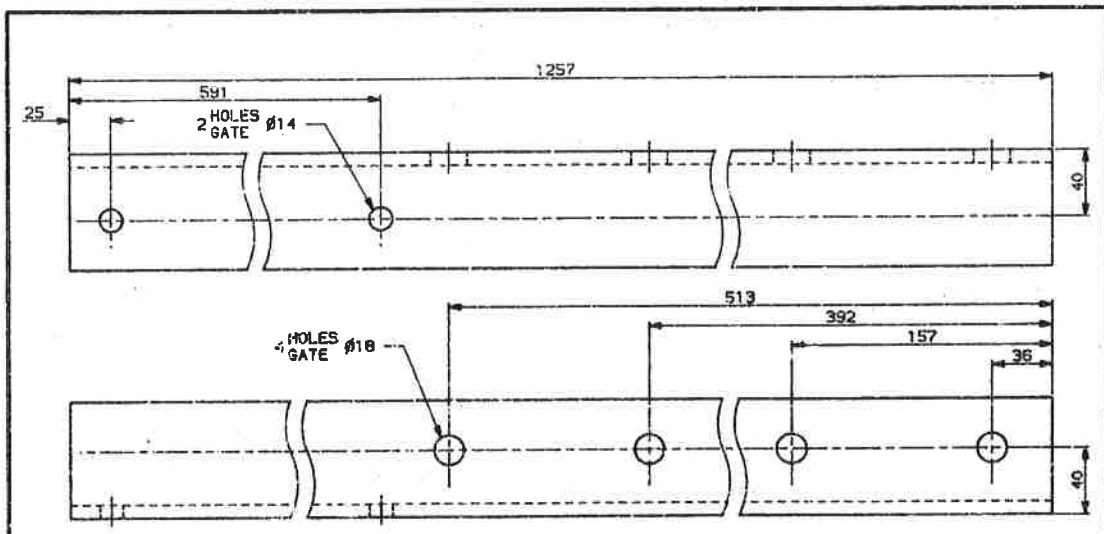

AMENDMENTS / WYSIGINGS

NO	NAME / NAAM	DATE / DATUM

DIMENSIONS, MILLIMETRES
AFMETINGS, MILLIMETER

FINISH/AFWERKING

ZINC COAT TO SINKBEDEK VOLG. SABS 763

MATERIAL/MATERIAAL

STEEL, ANGLE 70x70x10 THK
STAAL, HOEK DIK
STORES ITEM NO 11/14508
MAGASYNITEM-NO
SPEC CME 9 SYM
SPES SIM 8

DRN J.VAN TONDER
GET
TRCD CAD/JVT
NGT
CKD J.SWIEGERS
NGS

GEN TOLERANCES, LIN± 1
ALG TOLERANSIES, ANG/HOEK±

DO REF T88/42
TK-VERW
DATE 89-05-15
DATUM

ENG
IR

CHIEF ELECTRICAL ENGINEER
ELEKTRIESE HOOFINGENIEUR
JOHANNESBURG
SOUTH AFRICAN TRANSPORT SERVICES
SUID-AFRIKAANSE VERVOERDIENSTE

ELECTRIFICATION TYPES / ELEKTRIFIKASIETIPES, GENERAL/ALGEMEEN

SUPPORT, CATWALK (MAST SIDE)
SIGNAL GANTRY STRUCTURE
STEUN, LOOPLYS (MASKANT)
SINJAALSTEIERSTRUKTUUR

CEE-TMFD-3 SHT VEL 1

ASSY DRG
SAMEST-TEK

ELECTRIFICATION TYPES
REFERENCE DRG NO
CEE-MA-26 SH 78
ELEKTRIFIKASIETIPES
VERWYSINGSTEK-NO
CEE-MA-369 VEL 78

STORES ITEM NO
MAGASYNITEM

DRAWING NO CEE-
TEKENING NO
TMFD-3

SHEET 9 OF 15
VEL VAN

A3

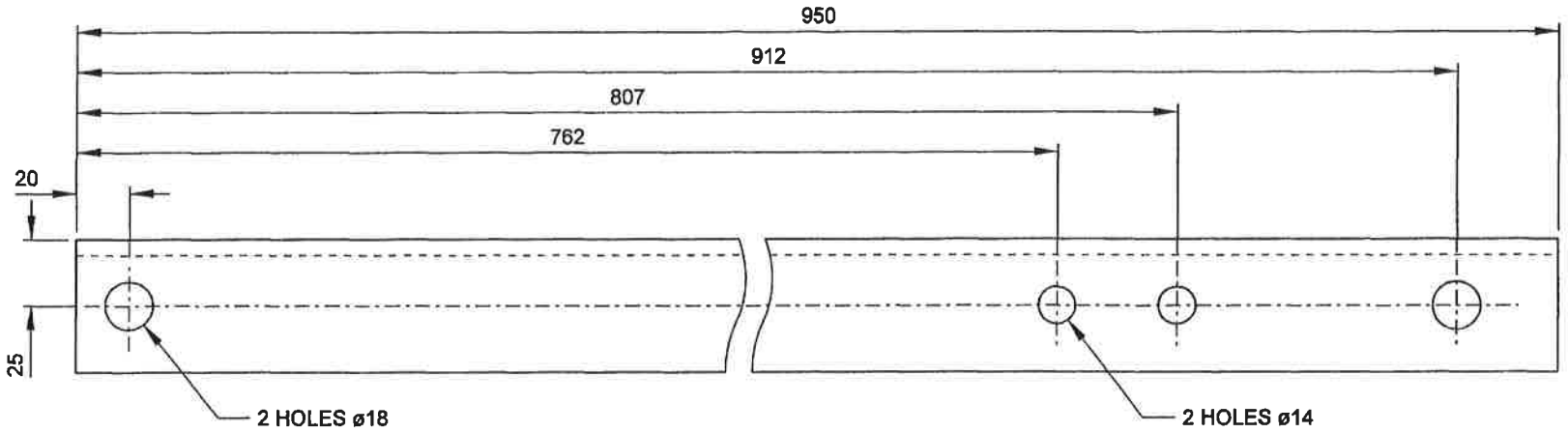

FINISH
ZINC COAT TO SANS 121 FOR CONDITIONS IN SITU.

NOTE
FOR MASTER RECORD INDEX SEE DOCUMENT NO. BBB1317.

AMENDMENTS		
NO	NAME	DATE
1	W.BRIGHT	92-11-04
2 x ø18 HOLES MOVED TO CENTRE LINE OF ANGLE IRON. RIGHT AND LEFT SIDE HANDRAIL COMBINED. DO REF: T91/065		
2	4/8/2003	
REVISED AND REDRAWN. DO REF: CDO/1772		

MATERIAL: ITEM NO ~~(11/14481)~~, STEEL, ANGLE, 50 x 50 x 6		
DO REF T88/42	GEN TOL: LIN± 1 ANG± ——	
DRN J v TONDER	CKD J SWIEGERS	DATE 89-05-15
ENG ——	C.E.D. MYHILL	for CHIEF ENG
CENTRAL DRAWING OFFICE SPOORNET		

SUPPORT, HANDRAIL
CATWALK

DIMENSIONS:mm
SCALE: 1:2

A3

DRAWING NO CEE-TMFD-3

SHEET 10 OF 15

AMENDMENTS		
NO	NAME	DATE
1	W.BRIGHT	92-11-04
ALL HOLES MOVED TO CENTRE LINE OF ANGLE IRON. DO REF: T91/065		
2	4/8/2000	
REVISED AND REDRAWN. DO REF: CDO/1772		

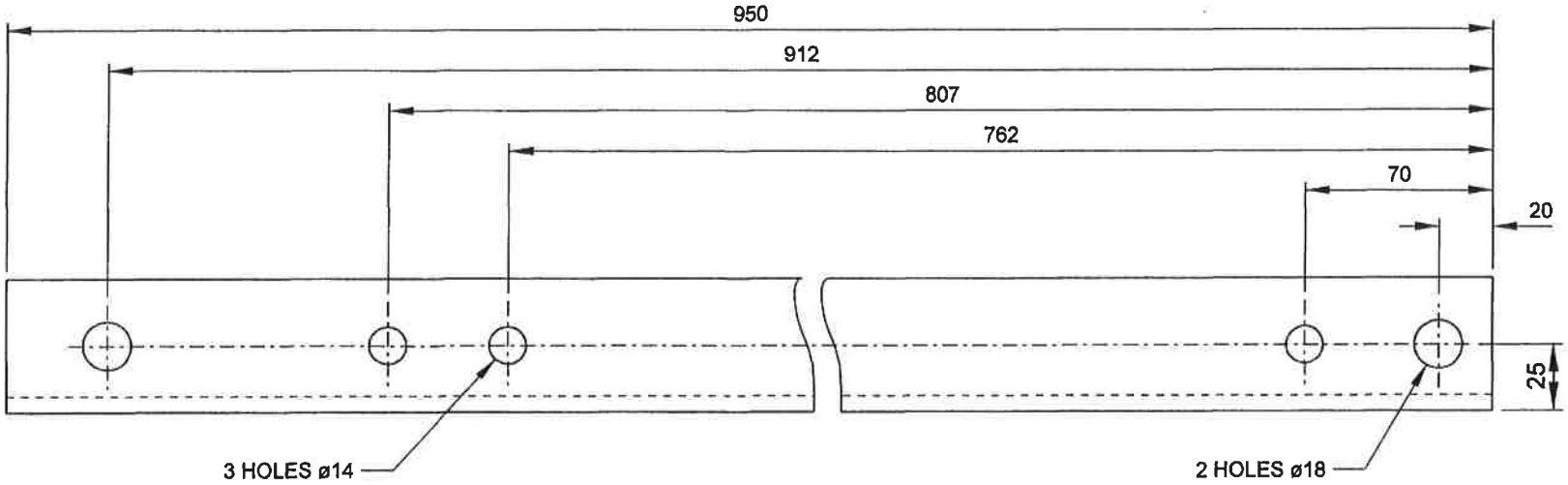

FINISH
ZINC COAT TO SANS 121 FOR CONDITIONS IN SITU.

NOTE
FOR MASTER RECORD INDEX SEE DOCUMENT NO. BBB1317.

MATERIAL: ITEM NO ~~(11/14481)~~, STEEL, ANGLE, 50 x 50 x 6		
DO REF T88/42	GEN TOL: LIN± 1 ANG± ——	
DRN J v TONDER	CKD J SWIEGERS	DATE 89-05-15
ENG ——	C.E.D. MYHILL	for CHIEF ENG
CENTRAL DRAWING OFFICE SPOORNET		

POST, HANDRAIL
CATWALK

DIMENSIONS:mm
SCALE: 1:2

A3

DRAWING NO CEE-TMFD-3

SHEET 11 OF 15

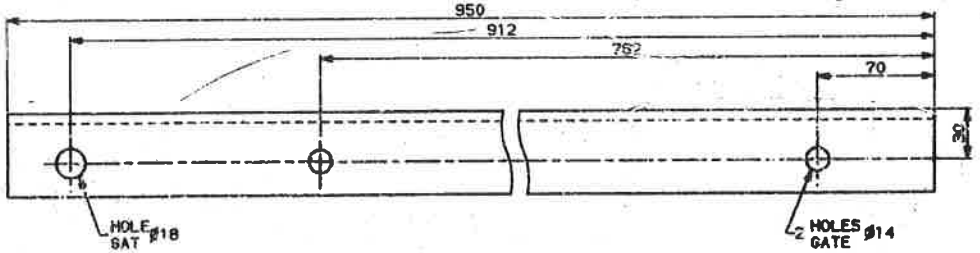

FINISH/AFWERKING

ZINC COAT TO SINKBEDEK VOLG. SABS 763

DIMENSIONS, MILLIMETRES
AFMETINGS, MILLIMETER

MATERIAL/MATERIAAL

STEEL, ANGLE / STAAL, HOEK 50x50x6 THK / DIK
STORES ITEM / MAGASYNITEM NO 11/14481
SPEC / SPES CME 9 SYM / SIM 8

0 100 200

DRN / GET	J.VAN TONDER	GEN TOLERANCES, LIN± 1 / ALG TOLERANSIES, ANG/HOEK±
TRCD / NGT	CAD/JVT	DO REF / TK-VERW T88/42
CKD / NGS	J.SWIEGERS	DATE / DATUM 89-05-15

CHIEF ELECTRICAL ENGINEER / ELEKTRIESE HOOFINGENIEUR
SOUTH AFRICAN TRANSPORT SERVICES / SUID-AFRIKAANSE VERVOERDIENSTE
JOHANNESBURG

ELECTRIFICATION TYPES / ELEKTRIFIKASIETIPES, GENERAL/ALGEMEEN

POST, HANDRAIL
CATWALK
STUT, HANDRELING
LOOPLYS

AMENDMENTS / WYSIGINGS

NO	NAME / NAAM	DATE / DATUM

CEE-TMFD-3 SHT / VEL 1

ASSY DRG / SAMEST-TEK
ELECTRIFICATION TYPES
REFERENCE DRG NO
CEE-MA-26 SH 78
ELEKTRIFIKASIETIPES
VERWYSINGSTEK-NO
CEE-MA-369 VEL 78
STORES ITEM NO / MAGASYNITEM NO

DRAWING NO / TEKENING NO CEE-TMFD-3
SHEET / VEL 12 OF / VAN 15

43

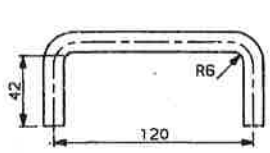

ITEM 3

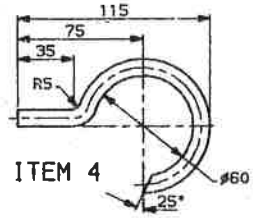

ITEM 4

ITEM	DESCRIPTION/BESKRYWING		QTY HVLD	STORES ITEM NO MAGASYNITEM-NO	DRG NO CEE-TEK
1	STEEL, CHEQUER PLATE THK STAAL GERUITE PLAAT DIK	600x560x6 11/—	1		
2	HINGE, HEAVY DUTY (SUITABLE SIZE) SKARNIER, SWAARDIENS (GEPASTE GROOTTE)		2		
3	STEEL, ROUND STAAL, RONDE	ø12x210L 11/2740	1		
4	STEEL, ROUND STAAL, RONDE	ø10x200L 11/2739	1		
5	CHAIN, STEEL, LONG LINK KETTING, STAAL, LANG SKAKEL	5x400L	1		

AMENDMENTS WYSIGINGS		
NO	NAME NAAM	DATE DATUM

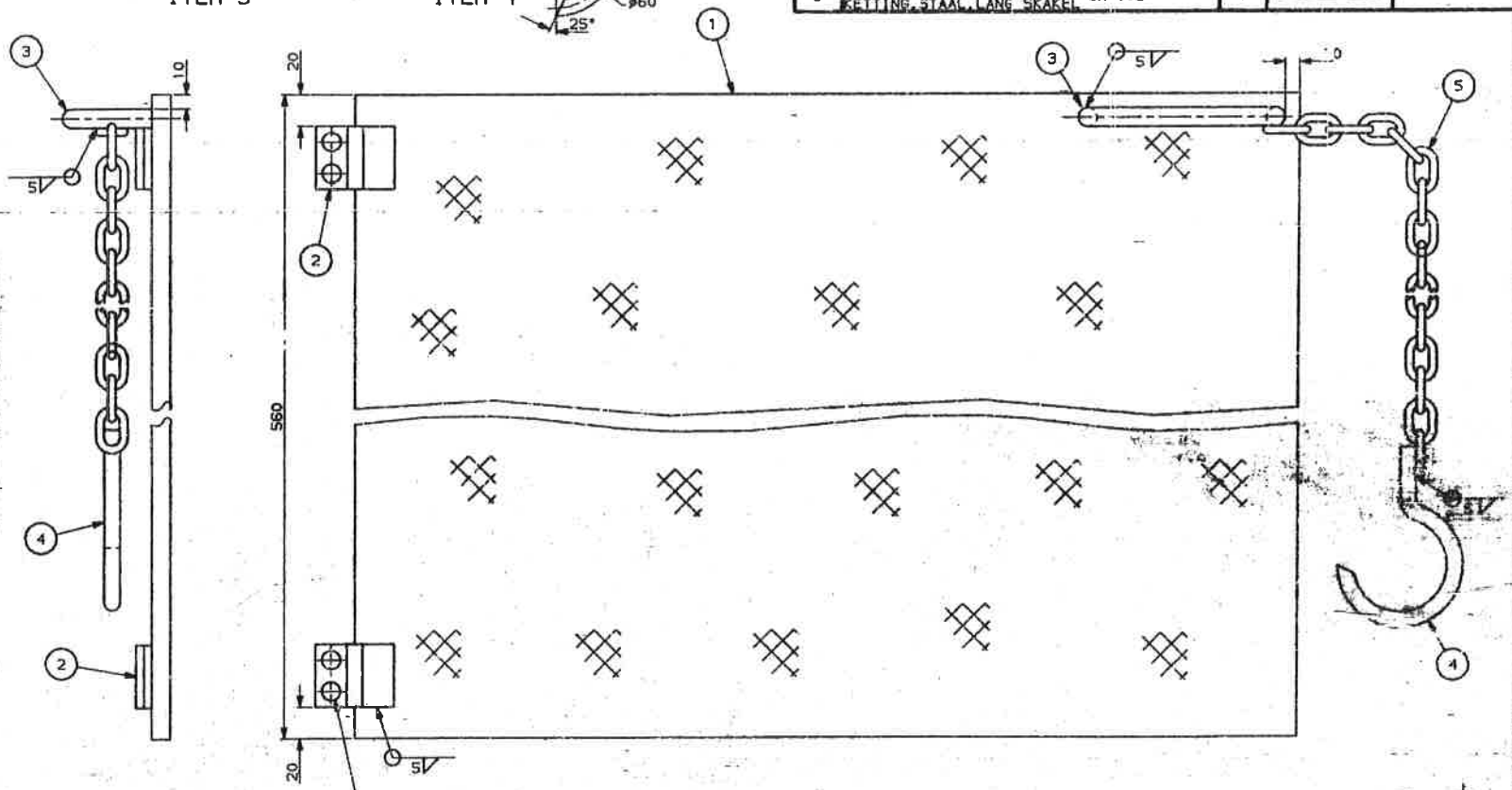

2 HOLES ø12 TO SUIT HINGES
2 GATE ØM SKARNIERE TE PAS

FINISH/AFWERKING

ZINC COAT TO SPEC
SINKBEDEK VOLGENS SPES SABS 763

DIMENSIONS: MILLIMETRES
AFMETINGS: MILLIMETER

GEN TOLERANCES: LIN± 1
ALG TOLERANSIES: LANG/HOEK± 1°

DRN GET	J.VAN TONDER	DO REF TK-VERW	T88/42
TRCD NGI	CAD/JVT	DATE DATUM	89-05-15
CHD NGS	J.SWIEGERS		

CHIEF ELECTRICAL ENGINEER
ELEKTRIESE HOOFINGENIEUR
SOUTH AFRICAN TRANSPORT SERVICES
SUID-AFRIKAANSE VERVOERDIENSTE

JOHANNESBURG

ELECTRIFICATION TYPES / ELEKTRIFIKASIETIPES: GENERAL/ALGEMEEN

TRAPDOOR
CATWALK
VALDEUR
LOOPLYS

CEE-TMFD-3 SHT VEL 1

ASSY DRG
SAMEST-TEK

ELECTRIFICATION TYPES
REFERENCE DRG NO
CEE-MA-26 SH 78
ELEKTRIFIKASIETIPES
VERWYSINGSTEK-NO
CEE-MA-369 VEL 78

STORES ITEM NO
MAGASYNITEM

DRAWING NO CEE-
TEKENING NO
TMFD-3
SHEET VEL 13 OF 15

A2

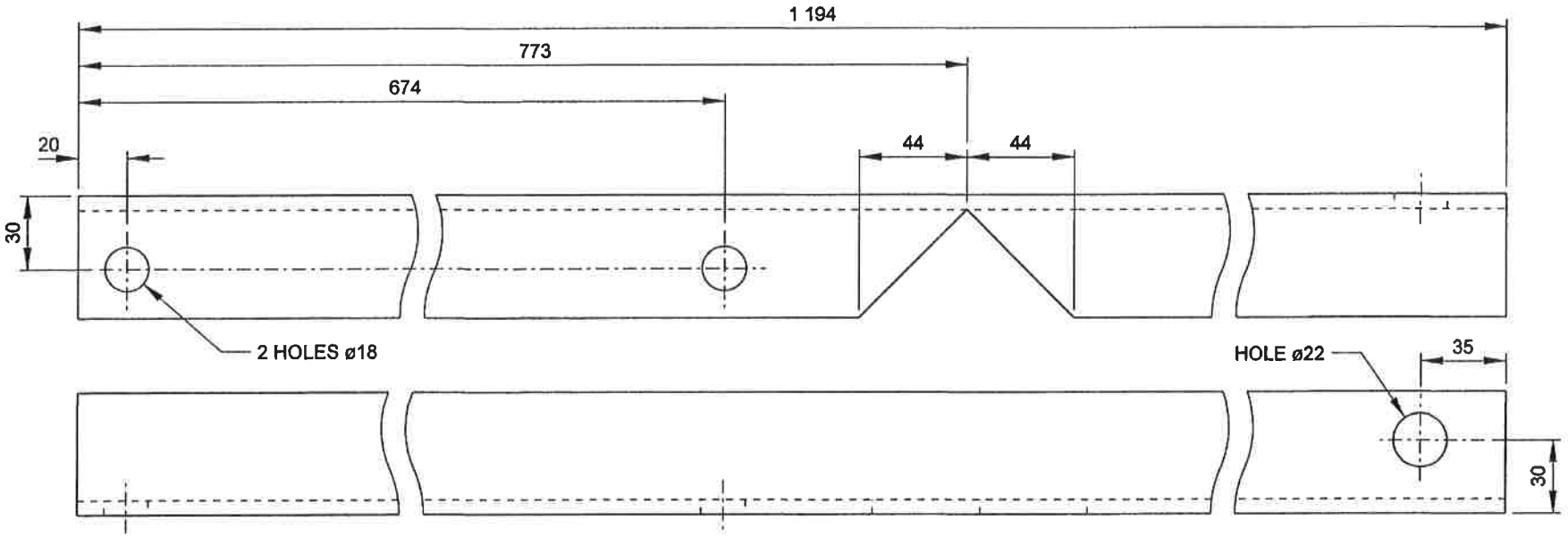

DEVELOPED VIEW

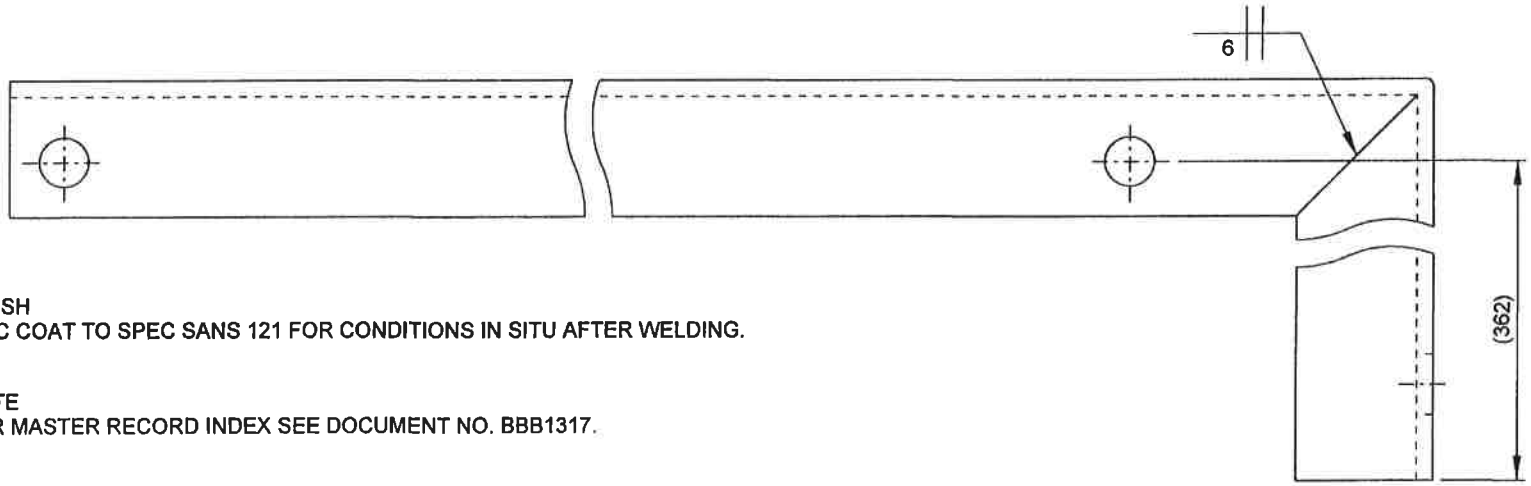

FINISH
ZINC COAT TO SPEC SANS 121 FOR CONDITIONS IN SITU AFTER WELDING.

NOTE
FOR MASTER RECORD INDEX SEE DOCUMENT NO. BBB1317.

AMENDMENTS		
NO	NAME	DATE
1	JP du Plessis	95-05-24
REVISED AND REDRAWN. DO REF T95/028		
2	4/8/2003	
REVISED AND REDRAWN. DO REF: CDO/1772		

MATERIAL: ITEM NO ~~(11/14481)~~, STEEL, ANGLE, 50 x 50 x 6		
DO REF: T88/042	GEN TOL: LIN± 1	ANG± 1°
DRN: J V T	CKD: J SWIEGERS	DATE: 89-05-15
ENG: ———	C E D MYHILL	for CHIEF ENG
CENTRAL DRAWING OFFICE SPOORNET		

HANDRAIL, LADDER END

CATWALK

DIMENSION: mm
SCALE: 1:2

A3

DRAWING NO CEE-TMFD-3

SHEET 14 OF 15

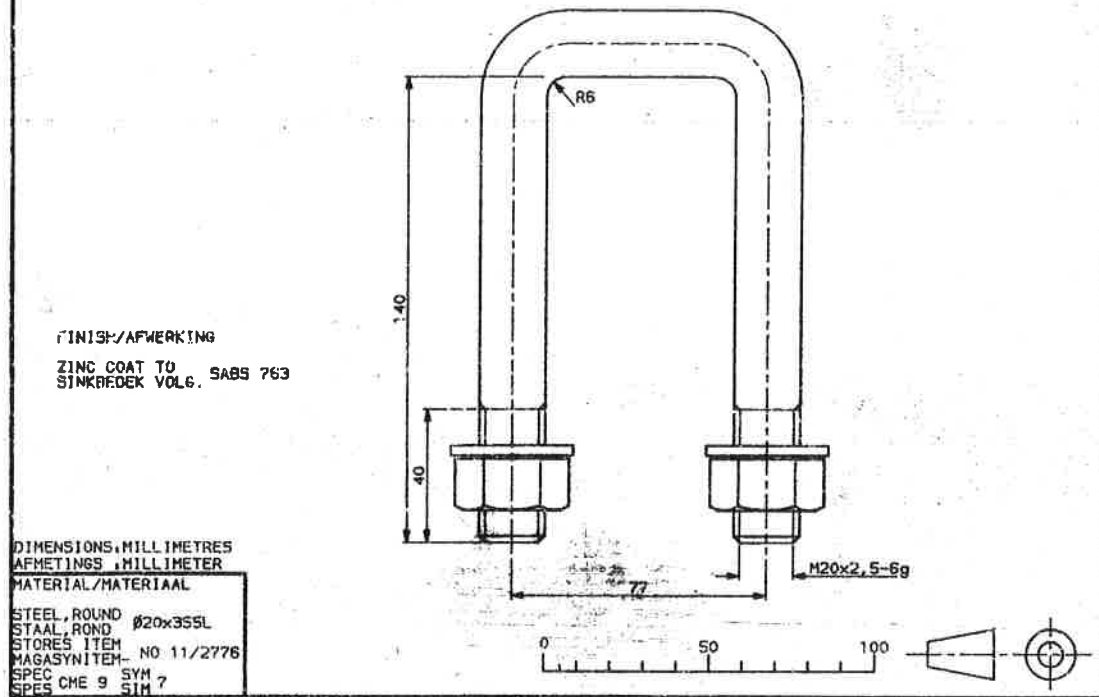

FINISH/AFWERKING

ZINC COAT TO SABS 763
SINKBEDEK VOLG.

DIMENSIONS, MILLIMETRES
AFMETINGS, MILLIMETER

MATERIAL/MATERIAAL

STEEL, ROUND Ø20x355L
STAAL, ROND
STORES ITEM NO 11/2776
MAGASYNITEM
SPEC CME 9 SYM 7
SPES SIM

DRN / GET	J.VAN TONDER	GEN TOLERANCES, LIN± 1 ALG TOLERANSIES, ANG/HOEK±	
TRCD / NGT	CAD/JVT	DO REF / TK-VERW	T88/42
CKD / NGS	J.SWIEGERS	DATE / DATUM	89-05-15

CHIEF ELECTRICAL ENGINEER
ELEKTRIESE HOOFINGENIEUR JOHANNESBURG

SOUTH AFRICAN TRANSPORT SERVICES
SUID-AFRIKAANSE VERVOERDIENSTE

ELECTRIFICATION TYPES / ELEKTRIFIKASIETIPES: GENERAL/ALGEMEEN

U-BOLT, M20: WITH NUTS & WASHERS
CATWALK

U-BOUT, M20: MET MOERE & WASTERS
LOOPLYS

AMENDMENTS
WYSIGINGS

NO	NAME NAAM	DATE DATUM

CEE-TMFD-3 SHT VEL 1

ASSY DRG
SAMEST-TEK

ELECTRIFICATION TYPES
REFERENCE DRG NO
CEE-MA-26 SH 78
ELEKTRIFIKASIETIPES
VERWYSINGSTEK-NO
CEE-MA-369 VEL 78

STORES ITEM NO
MAGASYNITEM

DRAWING NO CEE-TMFD-3
TEKENING NO

SHEET 15 OF 15
VEL VAN

A3